Ecoflam

LIGHT PROCESS APPLICATIONS

MAX-PRO

INDEX

ABOUT US	4
APPLICATIONS	5
SERVICE	5
PRODUCTS	6
EXAMPLES OF APPLICATIONS	32

ABOUT US

Thanks to a deep experience in the design and production of burners, Ecoflam is nowadays a leading brand in the development of innovative combustion technologies, providing a comprehensive range of burners all around the world, from small burners for residential heating applications to high power burners dedicated to the industrial sector.

A long experience in developing customized burners for any requirement of the global market allows Ecoflam to guarantee reliability
and excellent performance in any application area, even the most critical.
By linking a strong innovative ability to a developing will, Ecoflam is always ready to extend its technical and commercial proposal.

The continuous research has led to the acquirement of a specific know-how on many industrial processes and the possibility to develop advanced technology burners and industrial combustion systems combining together the use of conventional burners and duct burners.

APPLICATIONS

Ecoflam industrial burners can be used in several production processes and with any fuel: natural gas, LPG, and lean gas in many mixtures.

Our combustion systems are developed and dimensioned to satisfy the needs of all the industrial thermal process on which they are installed.
The possibility of choosing within a wide range of products, the high flexibility of installation and the constant technical support and assistance allow our customers to find the correct solution to any problem of industrial combustion.

To do so, Ecoflam offers combustion systems throughout a proper selection of dedicated devices with the aim to satisfy the required specifications and offer the most appropriated solution for a wide range of application fields:

- **Dryers**
- **Textile**
- **Industrial painting and coating**
- **Metallurgical**
- **Environment**
- **Heat surface treatment**
- **Automotive**
- **Paper**
- **Automation and supervising**

SERVICE

Ecoflam is close to its Customers and, for this reason, is important for us to give all the necessary support, efficient and quick, whenever is necessary. Our service team has a long experience in field application and works together with our technical offices in order to provide the best solutions, following the customer from consulting and pre-sale to after-sale assistance.

Start-up and Commissioning
We are usually called to start-up our combustion system, and tuning our burners into the best configuration. This important task is fundamental to give to the customer the best performance in terms of emission levels and combustion efficiency.

Training of local personnel
Our engineers will transfer their knowledge to the customers, in order to guarantee the correct maintenance and management of the combustion system.

Evaluation and Revamping
Our company has the capabilities to evaluate your combustion system and all the equipment installed in order to provide technical service to upgrade your system.
A written relation with technical solutions, which enable our customer to choose the best way to act, based on its needs and financial possibilities, usually follows such activities.

PRODUCTS

MB LMT	8
MB LMT HCA	10
HTC, HTS	12
MVRT	22
DBC LD MB, DBC LLD MB	29
DBO, DBC	30
SSDBS	32
SSDBD	34
HGC	36

Textile

Paper

Dryers

Industrial painting and coating

Heat surface treatment

Metallurgical

Automation and supervising

Environment

Food

MB LMT

Monoblock High Ratio Regulation

The “MB LMT” (Mono-Block Low Medium Temperatures) gas burner series, thanks to a light and handy structure combined with reduced overall dimensions, is ideal for all the installations requiring
a compact and silent combustion group with high turn-down ratio and a maximum temperature of process up to 600°C.
The burner structure is in carbon steel, while the parts in contact with the flame are in refractory steel and in nickel-chrome alloys.
The gas train, the combustion air blower and the automatic burner control unit are located externally to the burner, with orientation that can be defined according to the installation requirements.
The completely automatic operation allows different regulation controls such as modulating on gas or modulating on ratio.
The air-fuel modulating version allows to reach a turn-down ratio of 30:1 with neutral combustion chamber.

FEATURES

- Direct spark ignition, ionization flame detection electrode (UV cell on request)
- Standard for natural gas (LPG and other gaseous fuel on request)
- Turn down ratio 30:1
- Single phase or 3 phase motor, 50/60 Hz
- Available as packaged execution, with gas train according to EN 746-2 (or other required), on right or left hand
- Easy to install, start and operate

APPLICATIONS

- Bricks, refractory: roller dryers, tunnel dryers, continuous and intermittent dryers
- Textile: stenters, dryers, polymerizers, printings dryers
- Surface treatment: painting dryers and kilns
- Paper: air heaters, for hood and dryers
- Converting: air heaters for rotogravures, flexographic and coupling and adhesive coating machines
- Food: cereal dryers, roasters, band ovens for bakeries
- Drying tobacco

OVERALL DIMENSIONS

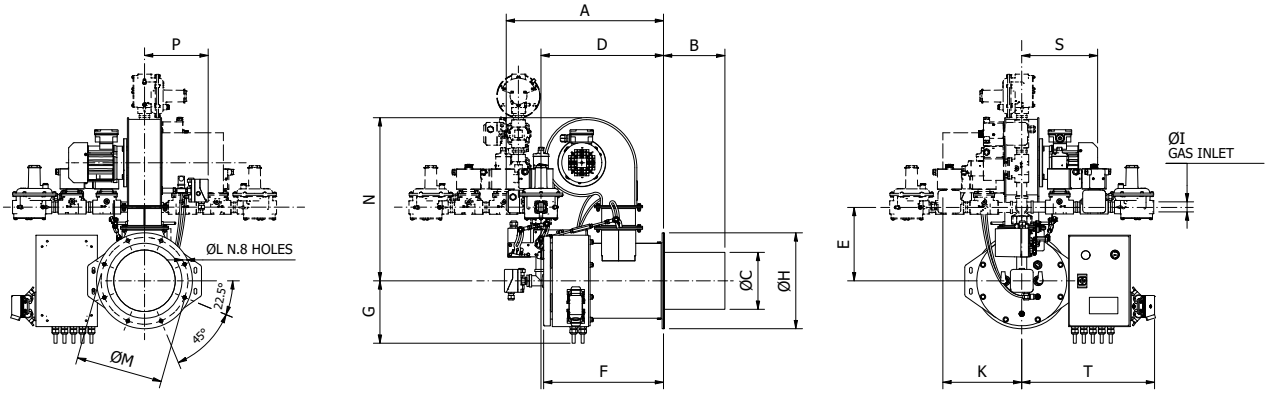

Model	A	B	ØC	D	E	F	G	ØH	ØI	K	ØL	ØM	N	P	S	T
MB LMT 90	510	210	110	400	220	350	207	220	1/2"	245	9,5	195	450	194	228	443
MB LMT 180	510	205	145	394	225	350	207	250	1"	245	9,5	225	480	194	228	463
MB LMT 235	510	205	145	394	225	350	207	250	1"	245	9,5	225	480	194	228	463
MB LMT 360	525	205	190	410	246	400	207	320	1"	263	11,5	290	545	212	253	493
MB LMT 525	625	215	220	490	294	450	207	370	1"	215	11,5	340	650	201	263	518
MB LMT 700	682	215	220	550	310	450	207	370	1"1/2	215	11,5	340	650	215	344	518
MB LMT 930	692	215	220	560	310	450	207	370	1"1/2	215	11,5	340	650	215	344	518
MB LMT 1450	760	277	280	610	375	500	230	460	2"	295	11,5	430	980	295	380	580

Note: overall dimensions may vary according to the gas train selected

TECHNICAL DATA

Model	MB LMT 90	MB LMT 180	MB LMT 235	MB LMT 360	MB LMT 525	MB LMT 700	MB LMT 930	MB LMT 1450
Minimum output	3 kW	6 kW	8 kW	12 kW	18 kW	23 kW	31 kW	48 kW
Maximum output	90 kW	180 kW	235 kW	360 kW	525 kW	700 kW	930 kW	1450 kW
Fuel	CH_4 / LPG							
Turn down ratio	30 : 1							
Operation	Air/Fuel Modulating							
Flame diameter*	160 mm	200 mm	200 mm	250 mm	300 mm	300 mm	350 mm	400 mm
Flame length*	500 mm	700 mm	850 mm	1000 mm	1200 mm	1500 mm	1600 mm	2500 mm
Gas supply pressure	50 ÷ 200 mbar				50 ÷ 200 mbar			
Electrical supply	230 V / 50 Hz - Single phase					400 V / 50Hz - Three phases***		
Ignition transformer	230 V 1x15 kV 25 mA							
Motor**	0,18 kW	0,18 kW	0,18 kW	0,37 kW	0,55 kW	0,75 kW	1,10 kW	2,20 kW
Installed power	0,70 kW	0,70 kW	0,70 kW	1,10 kW	1,30 kW	2,30 kW	2,30 kW	3,80 kW
Weight	35,0 kg	45,0 kg	45,0 kg	60,0 kg	75,0 kg	88,0 kg	90,0 kg	120,0 kg

*: 30% excess of air
**: Operation in zero backpressure combustion chamber; for different conditions, contact our Technical Service
***: Customer supplied direct wiring

The above mentioned performance data are referred to a burner working at maximum power.
Pressures showed are guidelines only. Gas pressures are referred to methane and LPG.
Performance data and dimensions are guidelines only.

MB LMT HCA

High Ratio Regulation

The “MB LMT HCA” (Mono-Block Low Medium Temperatures Hot Combustion Air) gas burner series, thanks to a light and handy structure combined with reduced overall dimensions, is ideal for all the installations requiring a compact and silent combustion group with high turn-down ratio and a maximum temperature of process up to 600°C.
The burner structure is in carbon steel, while the parts in contact with the flame are in refractory steel and in nickel-chrome alloys. The burner body is insulated and covered by a protective metallic layer to prevent heat dispersion. The burner is able to receive hot air as comburent till a maximum temperature of 250°C and a minimum content of oxygen in the comburent air of 20%.
The gas train and the automatic burner control unit are located externally to the burner, with orientation that can be defined according to the installation requirements.
The comburent air is usually provided under pressure by a fan, not included in the supply.
Maximum thermal power is 700 kW (600.000 kcal/h) and minimum thermal power is 9 kW (9.740 kcal/h).
The completely automatic operation allows different regulation controls such as on/off, high-low flame, modulating on gas or modulating on ratio; this last control system allows to reach a turn-down ratio of 20:1 with neutral combustion chamber.

FEATURES

- Direct spark ignition, ionization flame detection electrode
- Standard for natural gas (LPG on request)
- Turn down ratio 20:1
- Available as packaged execution, with gas train valves according to EN 746-2 (or other required), on right or left orientation
- Easy to install, start and operate

APPLICATIONS

- Bricks, refractory: roller dryers, tunnel dryers, continuous and intermittent dryers
- Textile: stenters, polymerisers, printings dryers
- Surface treatment: painting dryers and kilns
- Paper: air heaters, for hood and dryers
- Converting: air heaters for rotogravures, flexographic and coupling and adhesive coating machines
- Food: cereal dryers, roasters, band ovens for bakeries
- Environment: dryers for biomass, movable conveyor dryers, belt dryers

OVERALL DIMENSIONS

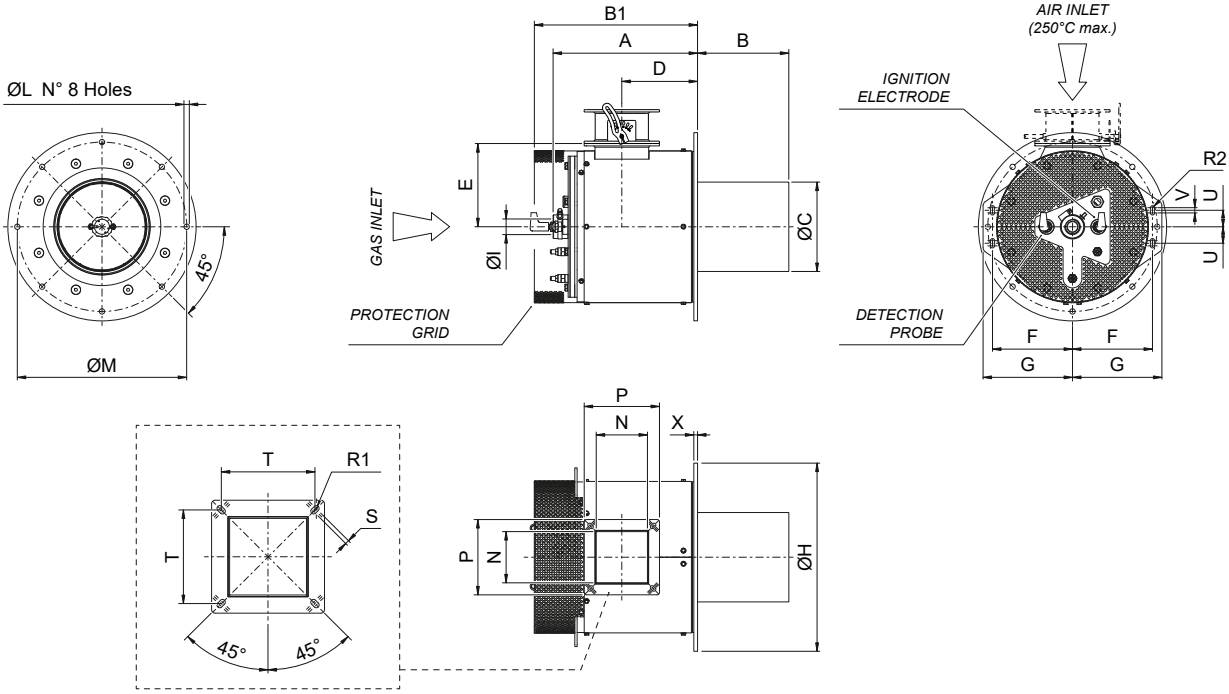

Model	A	B	B1	ØC	D	E	F	G	ØH	ØI	ØL	ØM	N	P	R1	R2	S	T	U	V	X
MB LMT HCA 180	247	195	295	145	155	150	140	155	320	1"	9,5	290	66	110	3,5	4,5	5,0	88,5	30	-	8
MB LMT HCA 235	247	195	295	145	155	150	140	155	320	1“	9,5	290	66	110	3,5	4,5	5,0	88,5	30	-	8
MB LMT HCA 360	305	195	345	190	160	180	170	190	400	1"	11,5	360	114	160	4,0	4,5	5,5	133,0	35	11	8
MB LMT HCA 525	345	206	395	220	210	220	195	215	450	1"1/2	11,5	420	144	190	5,0	4,5	5,0	163,5	35	11	8
MB LMT HCA 700	345	206	395	220	210	220	195	215	450	1"1/2	11,5	420	144	190	5,0	4,5	5,0	163,5	35	11	8

TECHNICAL DATA

Model	MB LMT HCA 180	MB LMT HCA 235	MB LMT HCA 360	MB LMT HCA 525	MB LMT HCA 700
Minimum output	9 kW	12 kW	18 kW	26 kW	35 kW
Maximum output	180 kW	235 kW	360 kW	525 kW	700 kW
Fuel	CH_4 (LPG on request)				
Turn down ratio	20 : 1	20 : 1	20 : 1	20 : 1	20 : 1
Operation	Modulating (gas only)				
Maximum excess of air (With combustion air temp.: 250°C)	50% at 90 kW 30% at 180 kW	50% at 118 kW 30% at 235 kW	50% at 180 kW 30% at 360 kW	50% at 263 kW 30% at 525 kW	50% at 350 kW 30% at 700 kW
Flame diameter*	230 mm	230 mm	280 mm	330 mm	330 mm
Flame length*	700 mm	850 mm	1000 mm	1200 mm	1500 mm
Gas supply pressure	9 mbar	15 mbar	10 mbar	6 mbar	10 mbar
Air supply pressure	16 mbar	28 mbar	22 mbar	22 mbar	40 mbar
Weight	25 kg	25 kg	35 kg	42 kg	42 kg

*: 30% excess of air

Special executions on request.
The above mentioned performance data are referred to a burner working at maximum power.
Pressures showed are guidelines only. Gas pressures are referred to methane gas.
Performance data and dimensions are guidelines only.

HTC, HTS

Intensive High/Medium Speed

The “HTC” (with concrete casting cone) and “HTS” (with silicon carbide burner cone) gas burner are blown-air burners that can operate with natural gas, LPG, lean gas and gas with low calorific power (on request).
The operation can be automatic or semi-automatic, and the burners are equipped with electric ignition and detection electrode.
These burner series are classified as “high/medium speed gas burners”, with exhaust gases speed coming out from the flame cone from few m/s to 100 m/s, or even higher values according to the outlet diameter of the burner cone.
Combustion air temperature ranges from room temperature to 100°C.
Because of its flexibility, these burners can be adjusted with a wide capacity range from 10:1 to 15:1 depending on the capacity of the burner.

FEATURES

- Direct spark ignition, ionization flame detection electrode (UV cell under request)
- Multifuel combustion head for natural gas and LPG
- Turn down ratio from 10:1 to 15:1 depending on the capacity of the burner
- Available as packaged execution, with gas train according to EN 746-2 (or other required), on right or left hand
- Easy to install, start and operate
- Supply available with the burner only or as dual bloc version

APPLICATIONS

- All types of kilns, suitable for oxidative, stoichiometric or reducing combustion:
  - roller kilns, tunnel kilns, intermittent kilns, melting kiln
  - continuous and intermittent dryers
- Iron metallurgic industry
- Surface treatment
- Printing and packing: air heaters for rotogravures, flexographic and coupling and adhesive coating machines
- Food: roasters
- Drying tobacco
- And furthermore, for any application which requires a wide regulation automatic gas burner, capable of operating in a strong vacuum or with strong counter-pressure

RANGE OVERVIEW

Concrete casting burner cone

Model	Max output	
HTC 58 S/30	58 kW	
HTC 105 S/30	105 kW	
HTC 190 S/0	190 kW	
HTC 220 S/0	220 kW	
HTC 300 S/0	300 kW	
HTC 450 S/0	450 kW	
HTC 850 S/0 PC	850 kW	
HTC 1160 S/0 PC	1160 kW	
HTC 1750 S/0 PC	1750 kW	
HTC 2325 S/0 PC	2325 kW	
HTC 3500 S/0 PC	3500 kW	

Silicon carbide burner cone

Model	Max output	
HTS 58 S/70	58 kW	
HTS 105 S/70	105 kW	
HTS 190 S/90	190 kW	
HTS 220 S/90	220 kW	
HTS 300 S/90	300 kW	
HTS 450 S/90	450 kW	

Steel flame tube

Model	Max output	
HTS 1750 S/90	1750 kW	
HTS 3500 S/90	3500 kW	

OVERALL DIMENSIONS

HTC 58
HTC 105
Concrete casting burner cone

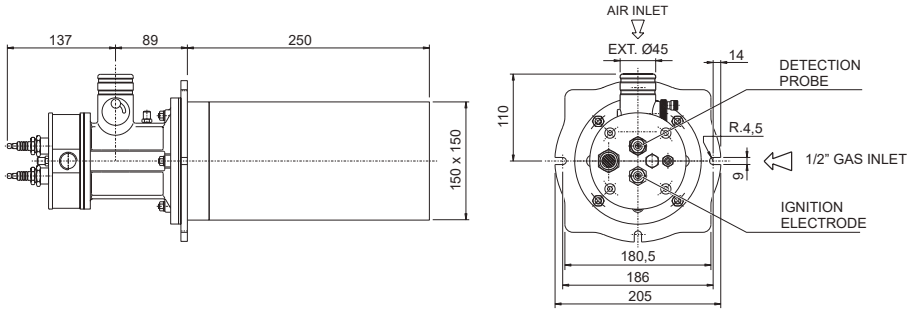

HTS 58
HTS 105
Silicon carbide burner cone

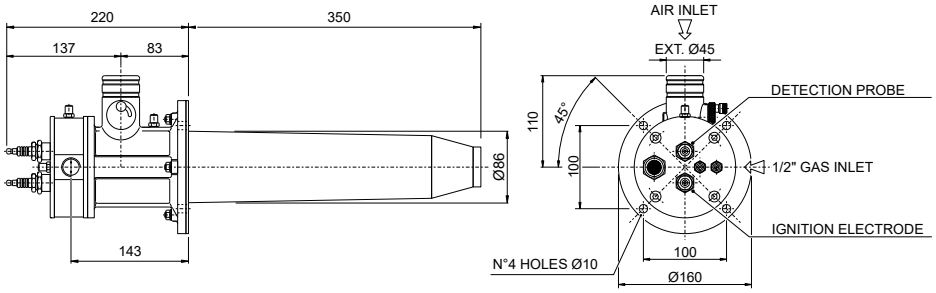

TECHNICAL DATA

Model	HTC 58 S/30.40	HTC 58 S/30.50	HTC 58 S/30.60	HTC 105 S/30.40	HTC 105 S/30.50	HTC 105 S/30.60
Maximum output	58 kW (50000 kcal/h)			105 kW (90300 kcal/h)		
Fuel	CH_4 / LPG			CH_4 / LPG		
Burner cone material	Concrete casting			Concrete casting		
Cone outlet diameter	Ø40 mm	Ø50 mm	Ø60 mm	Ø40 mm	Ø50 mm	Ø60 mm
Maximum excess of air	100% at 29 kW (25000 kcal/h)			100% at 52,5 kW (45150 kcal/h)		
Maximum excess of gas	35% at 58 kW (50000 kcal/h)			35% at 105 kW (90300 kcal/h)		
Flame diameter*	60 mm	70 mm	80 mm	60 mm	70 mm	80 mm
Flame length*	500 mm	450 mm	400 mm	700 mm	650 mm	600 mm
Gas supply pressure	31 mbar	40 mbar	35 mbar	80 mbar	80 mbar	80 mbar
Air supply pressure	30 mbar	35 mbar	30 mbar	83 mbar	83 mbar	83 mbar
Weight (burner cone included)	21,0 kg	20,6 kg	20,3 kg	21,0 kg	20,6 kg	20,3 kg

Model	HTS 58 S/70.38	HTS 105 S/70.38
Maximum output	58 kW (50000 kcal/h)	105 kW (90300 kcal/h)
Fuel	CH_4 (LPG and other gases on request)	CH_4 (LPG and other gases on request)
Burner cone material	Silicon carbide	Silicon carbide
Cone outlet diameter	Ø38 mm	Ø38 mm
Maximum excess of air	100% at 29 kW (25000 kcal/h)	100% at 52,5 kW (45150 kcal/h)
Maximum excess of gas	35% at 58 kW (50000 kcal/h)	35% at 105 kW (90300 kcal/h)
Flame diameter*	60 mm	60 mm
Flame length*	500 mm	650 mm
Gas supply pressure	38 mbar	80 mbar
Air supply pressure	34 mbar	80 mbar
Weight (burner cone included)	6,5 kg	6,5 kg

*: Stoichiometric conditions

Special executions on request.
The above mentioned performance data are referred to a burner working at maximum power.
Pressures showed are guidelines only. Gas pressures are referred to methane and LPG.
Performance data and dimensions are guidelines only.

OVERALL DIMENSIONS

HTC 190
HTC 220
Concrete casting burner cone

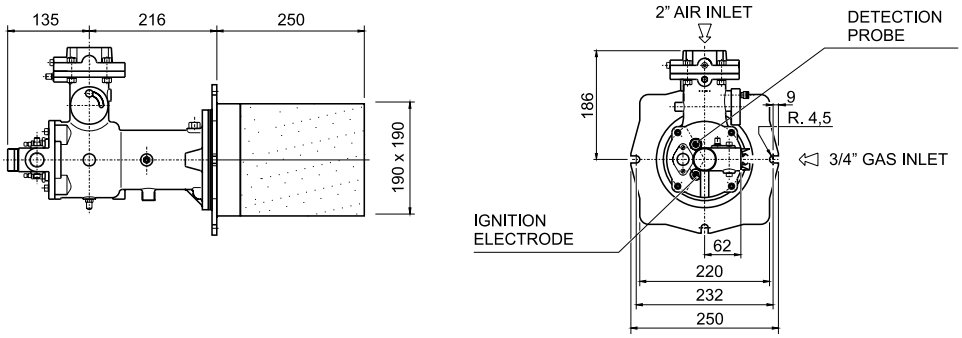

HTS 190
HTS 220
Silicon carbide burner cone

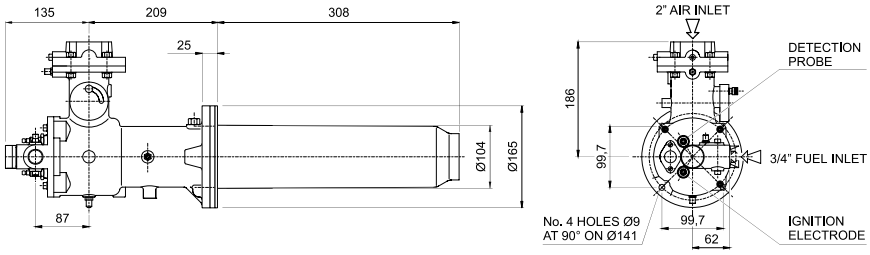

TECHNICAL DATA

Model	HTC 190 S/0.62	HTC 190 S/0.90	HTC 190 S/0.140	HTC 220 S/0.62	HTC 220 S/0.90	HTC 220 S/0.140
Maximum output	190 kW (165000 kcal/h)			220 kW (189200 kcal/h)		
Fuel	CH_4 / LPG			CH_4 / LPG		
Burner cone material	Concrete casting			Concrete casting		
Cone outlet diameter	Ø62 mm	Ø90 mm	Ø140 mm	Ø62 mm	Ø90 mm	Ø140 mm
Maximum excess of air	100% at 95 kW (82000 kcal/h)			100% at 110 kW (94600 kcal/h)		
Maximum excess of gas	35% at 190 kW (164000 kcal/h)			35% at 220 kW (189200 kcal/h)		
Flame diameter*	85 mm	110 mm	160 mm	85 mm	110 mm	160 mm
Flame length*	600 mm	500 mm	400 mm	600 mm	500 mm	400 mm
Gas supply pressure	35 mbar	18 mbar	18 mbar	47 mbar	24 mbar	24 mbar
Air supply pressure	58 mbar	43 mbar	43 mbar	76 mbar	57 mbar	57 mbar
Weight (burner cone included)	35,0 kg	34,0 kg	33,5 kg	35,0 kg	34,0 kg	33,5 kg

Model	HTS 190 S/90.65	HTS 220 S/90.65
Maximum output	190 kW (163400 kcal/h)	220 kW (189200 kcal/h)
Fuel	CH_4 (LPG and other gases on request)	CH_4 (LPG and other gases on request)
Burner cone material	Silicon carbide	Silicon carbide
Cone outlet diameter	Ø65 mm	Ø65 mm
Maximum excess of air	100% at 95 kW (81700 kcal/h)	100% at 110 kW (94600 kcal/h)
Maximum excess of gas	35% at 190 kW (163400 kcal/h)	35% at 220 kW (189200 kcal/h)
Flame diameter*	85 mm	90 mm
Flame length*	600 mm	700 mm
Gas supply pressure	51 mbar	69 mbar
Air supply pressure	80 mbar	105 mbar
Weight (burner cone included)	9 kg	9 kg

*: Stoichiometric conditions

Special executions on request.
The above mentioned performance data are referred to a burner working at maximum power.
Pressures showed are guidelines only. Gas pressures are referred to methane and LPG.
Performance data and dimensions are guidelines only.

OVERALL DIMENSIONS

HTC 300
HTC 450
Concrete casting burner cone

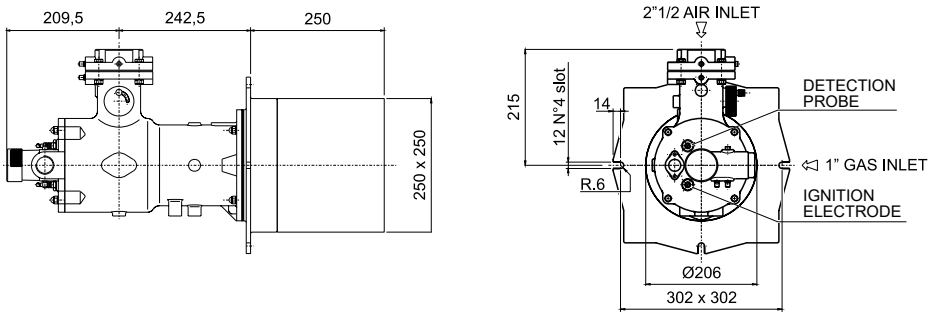

HTS 300
HTS 450
Silicon carbide burner cone

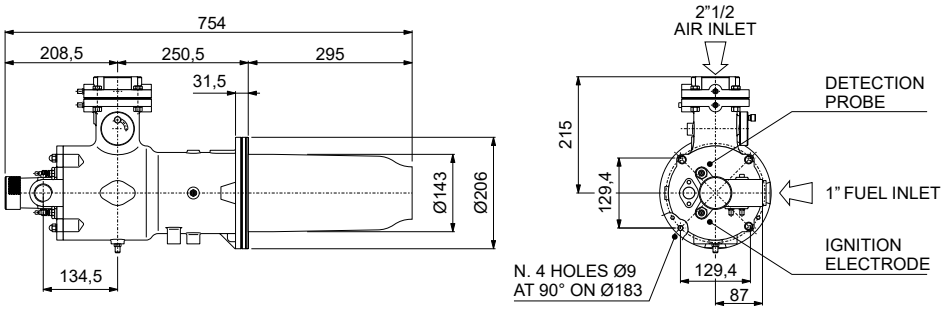

TECHNICAL DATA

Model	HTC 300 S/0.150	HTC 450 S/0.150
Maximum output	300 kW (260000 kcal/h)	450 kW (390000 kcal/h)
Fuel	CH_4 / LPG	CH_4 / LPG
Burner cone material	Concrete casting	Concrete casting
Cone outlet diameter	Ø150 mm	Ø150 mm
Maximum excess of air	100% at 250 kW (215000 kcal/h)	100% at 250 kW (215˙000 kcal/h)
Maximum excess of gas	35% at 300 kW (260000 kcal/h)	35% at 450 kW (390˙000 kcal/h)
Flame diameter*	170 mm	180 mm
Flame length*	500 mm	600 mm
Gas supply pressure	20 mbar	42 mbar
Air supply pressure	22 mbar	50 mbar
Weight (burner cone included)	73,0 kg	73,0 kg

Model	HTS 300 S/90.85	HTS 450 S/90.85
Maximum output	300 kW (260000 kcal/h)	450 kW (390000 kcal/h)
Fuel	CH_4 (LPG and other gases on request)	CH_4 (LPG and other gases on request)
Burner cone material	Silicon carbide	Silicon carbide
Cone outlet diameter	Ø85 mm	Ø85 mm
Maximum excess of air	100% at 250 kW (215000 kcal/h)	100% at 250 kW (215˙000 kcal/h)
Maximum excess of gas	35% at 300 kW (260000 kcal/h)	35% at 450 kW (390˙000 kcal/h)
Flame diameter*	100 mm	105 mm
Flame length*	530 mm	700 mm
Gas supply pressure	36 mbar	82 mbar
Air supply pressure	43 mbar	94 mbar
Weight (burner cone included)	30 kg	30 kg

*: Stoichiometric conditions

Special executions on request.
The above mentioned performance data are referred to a burner working at maximum power.
Pressures showed are guidelines only. Gas pressures are referred to methane and LPG.
Performance data and dimensions are guidelines only.

OVERALL DIMENSIONS

HTC 850
Concrete casting burner cone

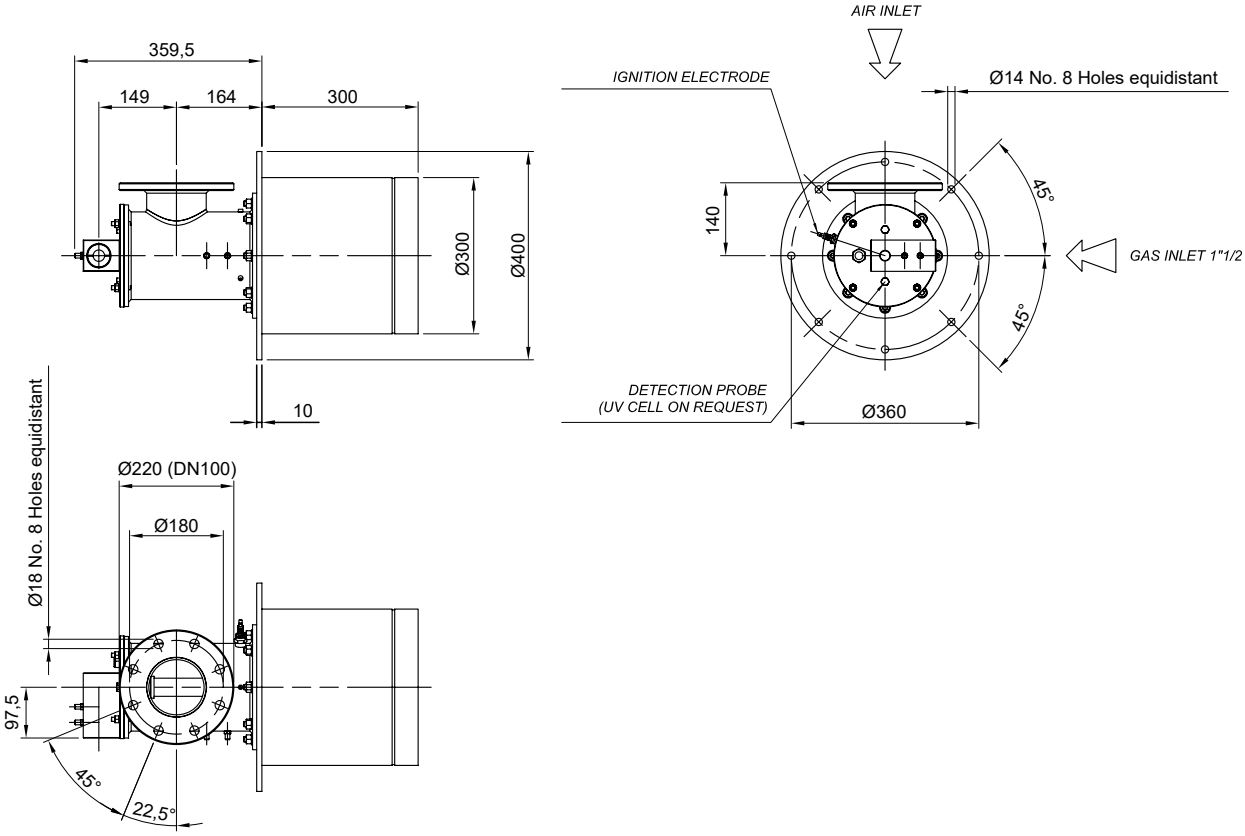

TECHNICAL DATA

Model	HTC 850 S/0 PC .180
Maximum output	850 kW (730000 kcal/h)
Fuel	CH_4 / LPG
Burner cone material	Concrete casting
Cone outlet diameter	Ø180 mm
Maximum excess of air	100% at 425 kW (365000 kcal/h)
Maximum excess of gas	35% at 850 kW (7300000 kcal/h)
Flame diameter*	200 mm
Flame length*	1000 mm
Gas supply pressure	53 mbar
Air supply pressure	62 mbar
Weight (burner cone included)	84,0 kg

*: Stoichiometric conditions

Special executions on request.
The above mentioned performance data are referred to a burner working at maximum power.
Pressures showed are guidelines only. Gas pressures are referred to methane and LPG.
Performance data and dimensions are guidelines only.

OVERALL DIMENSIONS

HTC 1160
Concrete casting burner cone

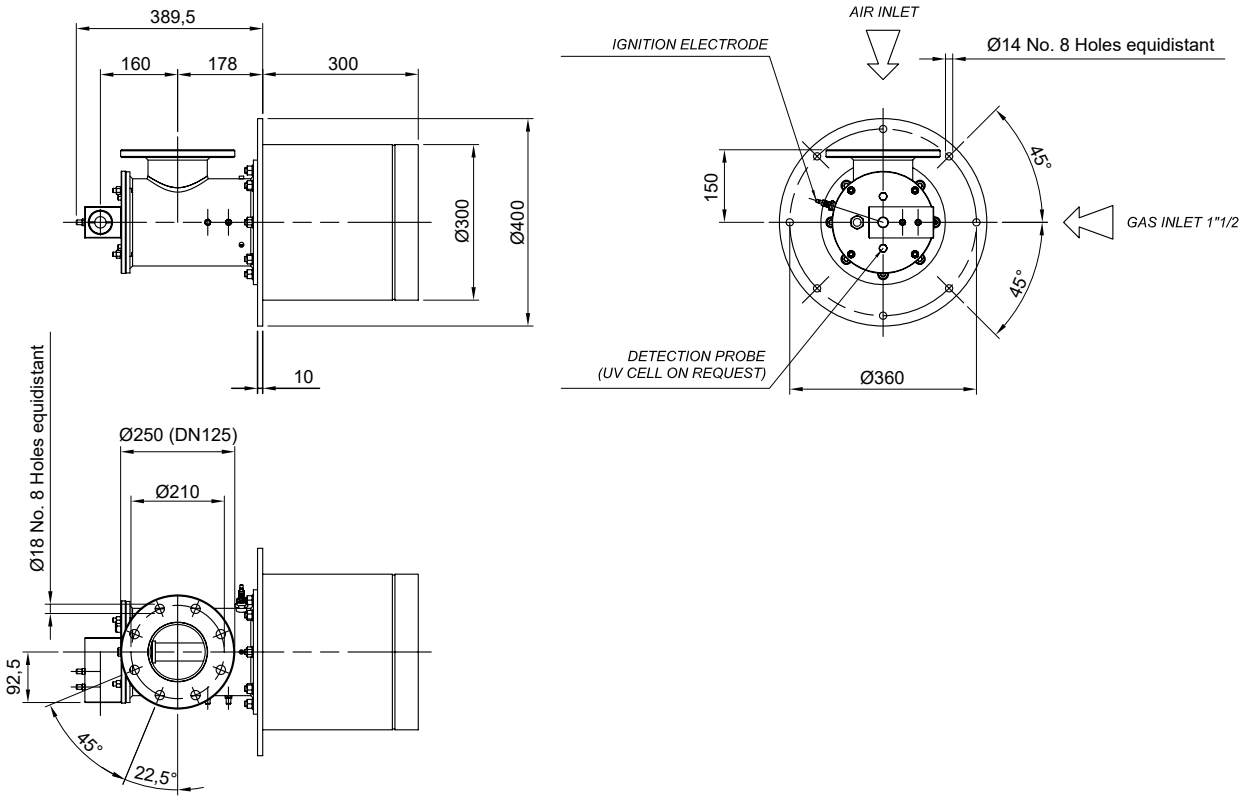

TECHNICAL DATA

Model	HTC 1160 S/0 PC .200
Maximum output	1160 kW (1000 Mcal/h)
Fuel	CH_4 / LPG
Burner cone material	Concrete casting
Cone outlet diameter	Ø200 mm
Maximum excess of air	100% at 580 kW (500 Mcal/h)
Maximum excess of gas	35% at 1160 kW (1000 Mcal/h)
Flame diameter*	220 mm
Flame length*	1300 mm
Gas supply pressure	30 mbar
Air supply pressure	45 mbar
Weight (burner cone included)	112 kg

*: Stoichiometric conditions

Special executions on request.
The above mentioned performance data are referred to a burner working at maximum power.
Pressures showed are guidelines only. Gas pressures are referred to methane and LPG.
Performance data and dimensions are guidelines only.

OVERALL DIMENSIONS

HTC 1750
Concrete casting burner cone

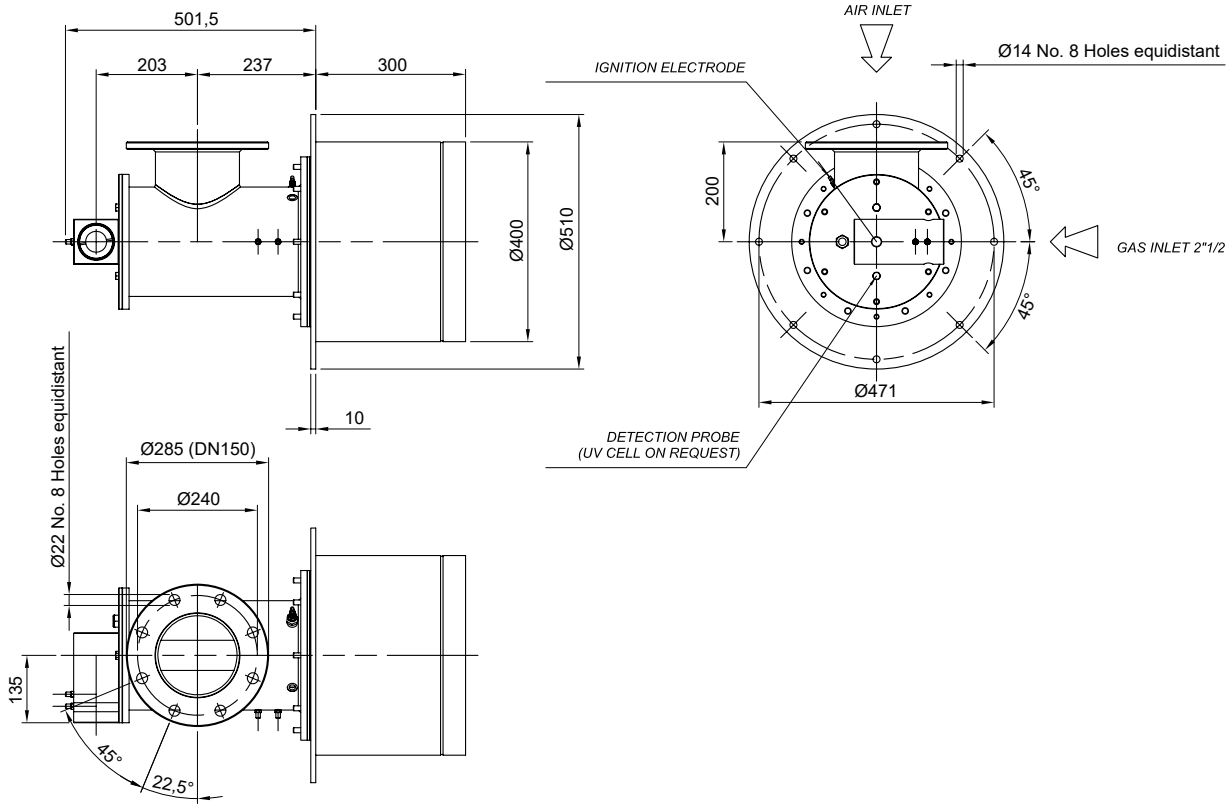

TECHNICAL DATA

Model	HTC 1750 S/0 PC .250
Maximum output	1750 kW (1500 Mcal/h)
Fuel	CH_4 / LPG
Burner cone material	Concrete casting
Cone outlet diameter	Ø250 mm
Maximum excess of air	100% at 875 kW (750 Mcal/h)
Maximum excess of gas	35% at 1750 kW (1500 Mcal/h)
Flame diameter*	270 mm
Flame length*	1800 mm
Gas supply pressure	45 mbar
Air supply pressure	45 mbar
Weight (burner cone included)	255 kg

*: Stoichiometric conditions

Special executions on request.
The above mentioned performance data are referred to a burner working at maximum power.
Pressures showed are guidelines only. Gas pressures are referred to methane and LPG.
Performance data and dimensions are guidelines only.

OVERALL DIMENSIONS

HTC 2325
Concrete casting burner cone

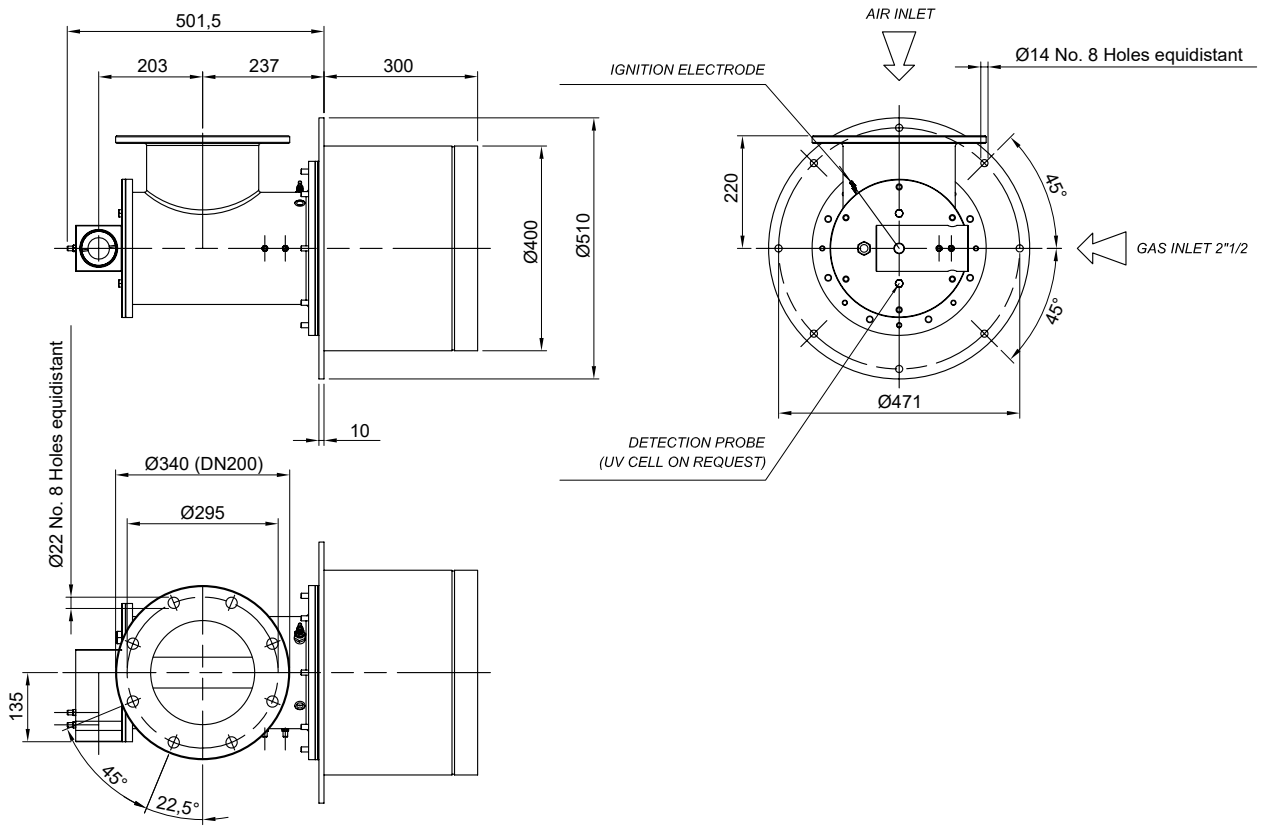

TECHNICAL DATA

Model	HTC 2325 S/0 PC .225
Maximum output	2325 kW (2000 Mcal/h)
Fuel	CH_4 / LPG
Burner cone material	Concrete casting
Cone outlet diameter	Ø225 mm
Maximum excess of air	100% at 1163 kW (1000 Mcal/h)
Maximum excess of gas	35% at 2325 kW (2000 Mcal/h)
Flame diameter*	250 mm
Flame length*	1700 mm
Gas supply pressure	40 mbar
Air supply pressure	40 mbar
Weight (burner cone included)	270 kg

*: Stoichiometric conditions

Special executions on request.
The above mentioned performance data are referred to a burner working at maximum power.
Pressures showed are guidelines only. Gas pressures are referred to methane and LPG.
Performance data and dimensions are guidelines only.

OVERALL DIMENSIONS

HTC 3500
Concrete casting burner cone

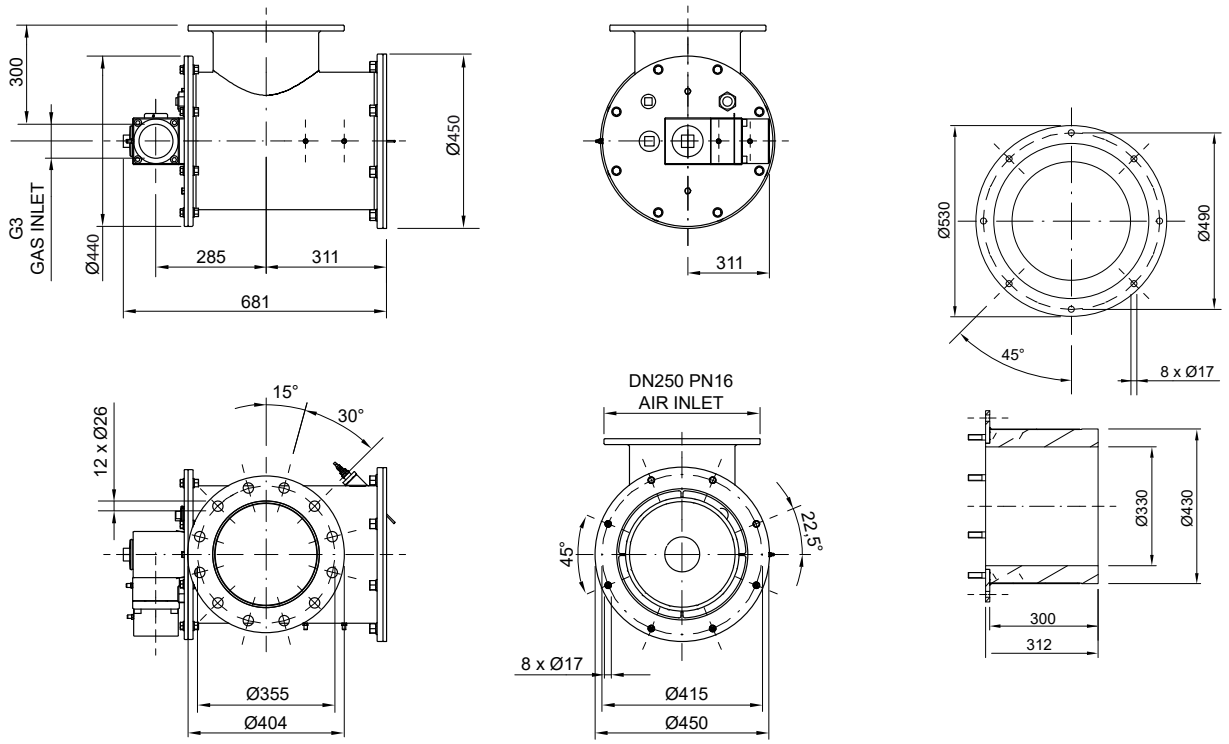

TECHNICAL DATA

Model	HTC 3500 S/0 PC .250
Maximum output	3500 kW
Fuel	CH_4 / LPG
Burner cone material	Concrete casting
Cone outlet diameter	Depending on installation requirements
Maximum excess of air	
Maximum excess of gas	
Flame diameter*	
Flame length*	
Gas supply pressure	
Air supply pressure	
Weight (burner cone included)	

*: Stoichiometric conditions

Special executions on request.
The above mentioned performance data are referred to a burner working at maximum power.
Pressures showed are guidelines only. Gas pressures are referred to methane and LPG.
Performance data and dimensions are guidelines only.

MVRT

Metallic Volumetric for Radiant tube

The “MVRT” range offers blown-air burners suitable to work with natural gas; versions for LPG, lean gas and gas with low calorific power are available on request.
These burners are designed for installation in all processes where it is necessary to obtain a deeply oxidizing combustion to limit the working temperature.
The completely automatic operation allows regulations with high/low flame or air/gas modulating; this last version gives the possibility to obtain max÷min regulation ratio up to 10:1.
The maximum thermal potentiality is 800 kW (688000 kcal/h) while the minimum can come up to 7 kW (6000 kcal/h).
Combustion air temperature required for this burner can vary from room temperature up to 100 °C.
Particular attention has been dedicated to the CO and NOx emissions produced by the combustion process.
Burner structure of model MVRT 70, 140 and 280 is painted casting, with body in cast iron, and the back in aluminium; the burner body of model 520 and 800 is made out of carbon steel. All parts in direct contact with the flame are made of refractory steel and Nickel-Chrome alloys.
The burner has ignition and flame detection electrodes, pressure switch to measure air and gas instantaneous flows, and flame indicating light.

FEATURES

- Burner for radiant tube to heat liquid tanks
- Direct spark ignition, ionization flame detection electrode
- Combustion head for natural gas; LPG and other gases on request
- Turn down ratio 10:1
- Available as complete version with gas train, according to EN746-2 on right or left hand
- Easy to install, start and operate

APPLICATIONS

- All types of kilns, suitable for oxidative, stoichiometric or reducing combustion
- Bricks, refractory:
  - roller kilns, tunnel kilns, intermittent kilns, melting kilns
  - continuous and intermittent dryers
- Iron metallurgic industry
- Surfaces treatment
- Printing and packing: air heaters for rotogravures, flexographic and coupling and adhesive coating machines
- Food: cereal dryers, roasters
- Drying tobacco
- And furthermore, for any application which requires a wide regulation automatic gas burner, capable of operating in a strong vacuum or with strong counter-pressure

RANGE OVERVIEW

Model	Max output	
MVRT 70	70 kW	
MVRT 140	140 kW	
MVRT 280	280 kW	
MVRT 520	520 kW	
MVRT 800	800 kW	

OVERALL DIMENSIONS

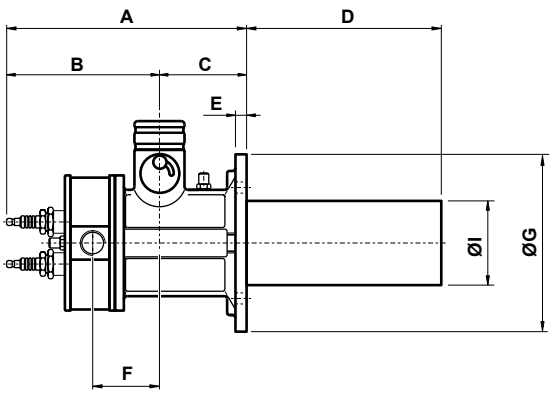

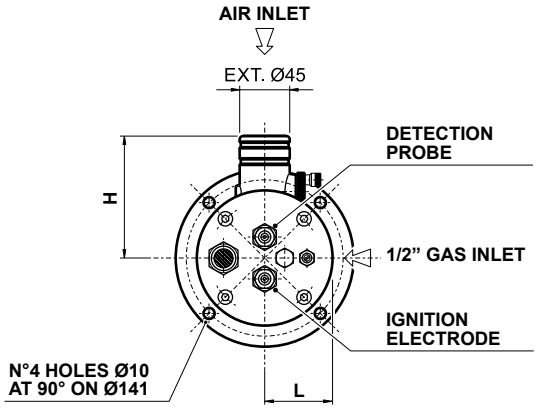

Model	A	B	C	D	E	F	ØG	ØI	H	L
MVRT 70	217	137	80	175	10	60	160	76	110	76

Note: overall dimensions may vary according to the gas train selected

TECHNICAL DATA

Model	MVRT 70
Minimum output	7 kW (6000 kcal/h)
Maximum output	70 kW (60000 kcal/h)
Fuel	CH_4 (LPG and other gases on request)
Flame tube material	Ni-Cr Alloy
Flame tube diameter	Ø76 mm
Maximum excess of air	200% at 314 kW (30000 kcal/h)
Maximum excess of gas	30%
Flame diameter*	60 mm
Flame length*	500 mm
Gas supply pressure	40 mbar
Air supply pressure	30 mbar
Weight	8 kg

*: Stoichiometric conditions

The above mentioned performance data are referred to a burner working at maximum power.
Pressures showed are guidelines only. Gas pressures are referred to methane and LPG.
Performance data and dimensions are guidelines only.

OVERALL DIMENSIONS

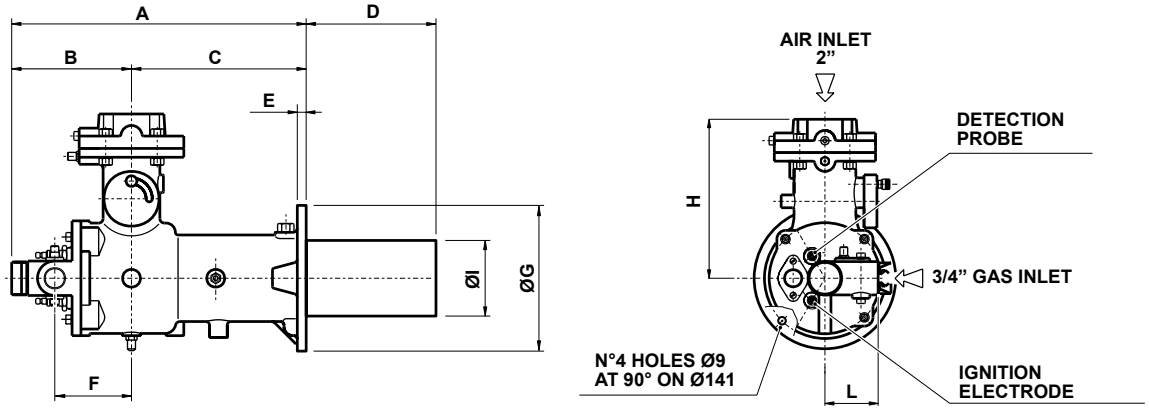

Model	A	B	C	D	E	F	ØG	ØI	H	L
MVRT 140	335	138	197	150	13	88	165	90	188	62

Note: overall dimensions may vary according to the gas train selected

TECHNICAL DATA

Model	MVRT 140
Minimum output	14 kW (12000 kcal/h)
Maximum output	140 kW (120000 kcal/h)
Fuel	CH_4 (LPG and other gases on request)
Flame tube material	Ni-Cr Alloy
Flame tube diameter	Ø90 mm
Maximum excess of air	200% at 70 kW (60200 kcal/h)
Maximum excess of gas	30%
Flame diameter*	80 mm
Flame length*	700 mm
Gas supply pressure	55 mbar
Air supply pressure	14 mbar
Weight	10,5 kg

*: Stoichiometric conditions

The above mentioned performance data are referred to a burner working at maximum power.
Pressures showed are guidelines only. Gas pressures are referred to methane and LPG.
Performance data and dimensions are guidelines only.

OVERALL DIMENSIONS

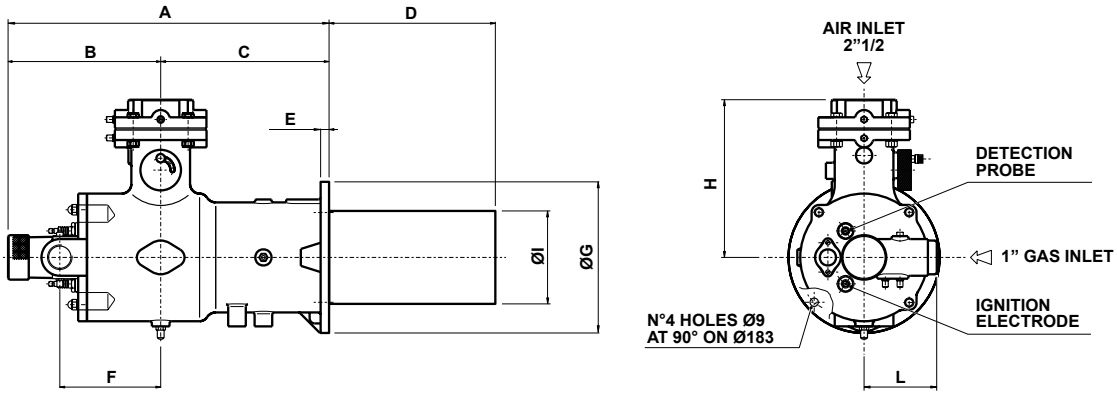

Model	A	B	C	D	E	F	ØG	ØI	H	L
MVRT 280	440	211	229	198	11,5	136	206	114	215	87

Note: overall dimensions may vary according to the gas train selected

TECHNICAL DATA

Model	MVRT 280
Minimum output	28 kW (24000 kcal/h)
Maximum output	280 kW (240000 kcal/h)
Fuel	CH_4 (LPG and other gases on request)
Flame tube material	Ni-Cr Alloy
Flame tube diameter	Ø114 mm
Maximum excess of air	200% at 140 kW (120000 kcal/h)
Maximum excess of gas	30%
Flame diameter*	100 mm
Flame length*	700 mm
Gas supply pressure	50 mbar
Air supply pressure	35 mbar
Weight	28 kg

*: Stoichiometric conditions

The above mentioned performance data are referred to a burner working at maximum power.
Pressures showed are guidelines only. Gas pressures are referred to methane and LPG.
Performance data and dimensions are guidelines only.

OVERALL DIMENSIONS

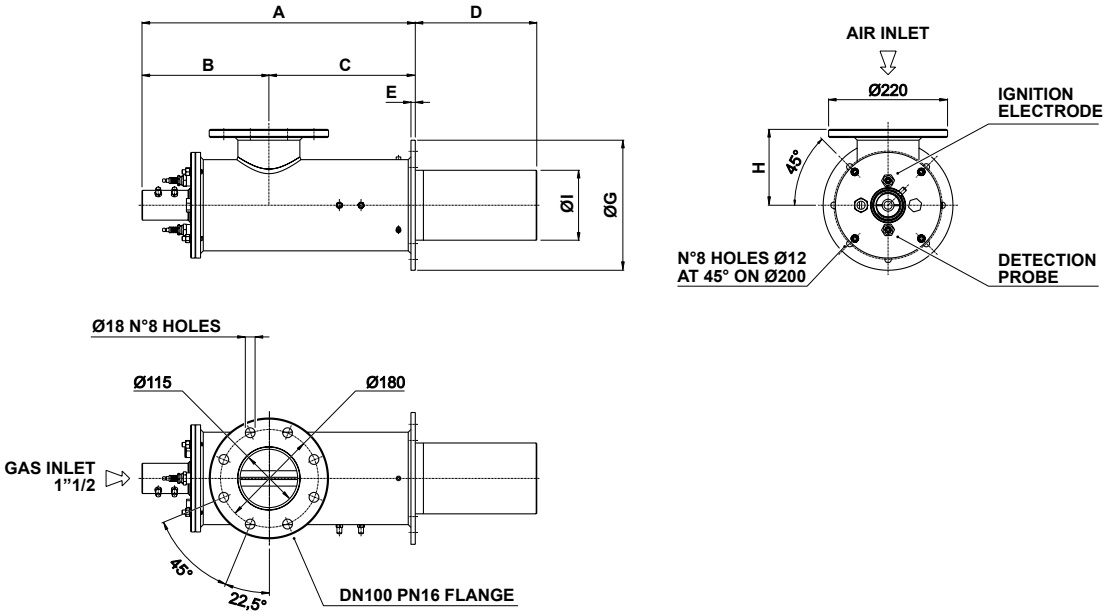

Model	A	B	C	D	E	ØG	ØI	H
MVRT 520	504	234	270	225	8	240	129	140

Note: overall dimensions may vary according to the gas train selected

TECHNICAL DATA

Model	MVRT 520
Minimum output	52 kW (45000 kcal/h)
Maximum output	520 kW (450000 kcal/h)
Fuel	CH_4 (LPG and other gases on request)
Flame tube material	Ni-Cr Alloy
Flame tube diameter	Ø129 mm
Maximum excess of air	200% at 260 kW (223600 kcal/h)
Maximum excess of gas	30%
Flame diameter*	150 mm
Flame length*	900 mm
Gas supply pressure	65 mbar
Air supply pressure	18 mbar
Weight	26 kg

*: Stoichiometric conditions

The above mentioned performance data are referred to a burner working at maximum power.
Pressures showed are guidelines only. Gas pressures are referred to methane and LPG.
Performance data and dimensions are guidelines only.

OVERALL DIMENSIONS

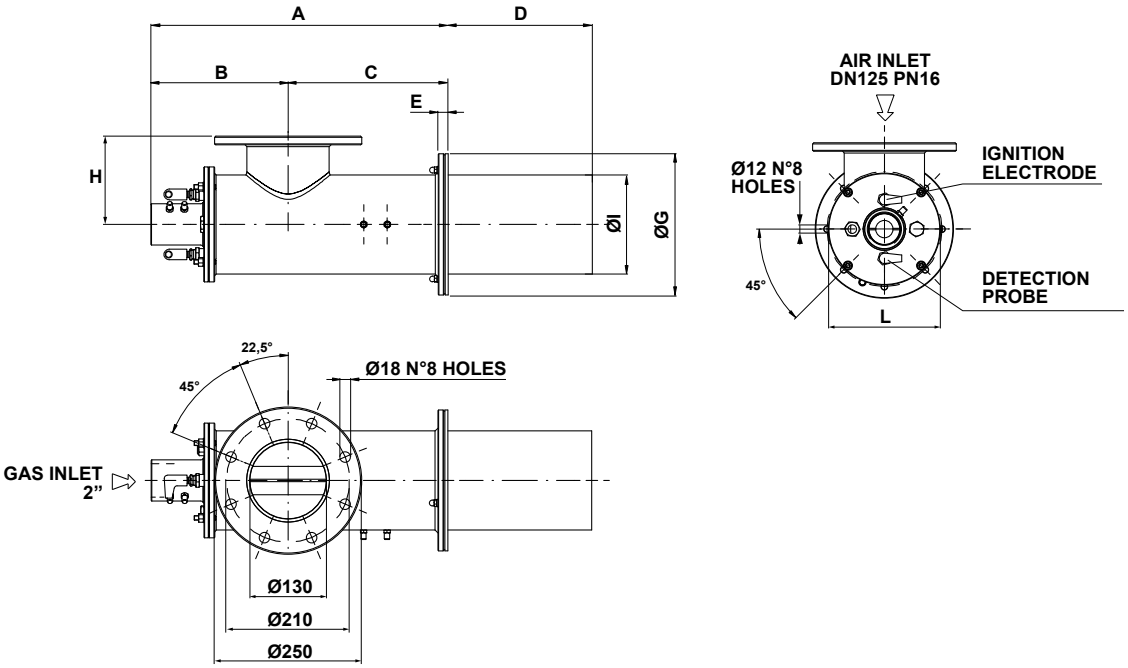

Model	A	B	C	D	E	F	ØG	ØI	H	ØL
MVRT 800	505	233	272	245	17	88	240	168,3	150	200

Note: overall dimensions may vary according to the gas train selected

TECHNICAL DATA

Model	MVRT 800
Minimum output	80 kW (68800 kcal/h)
Maximum output	800 kW (688000 kcal/h)
Fuel	CH_4 (LPG and other gases on request)
Flame tube material	Ni-Cr Alloy
Flame tube diameter	Ø168 mm
Maximum excess of air	200% at 580 kW (500000 kcal/h)
Maximum excess of gas	30%
Flame diameter*	140 mm
Flame length*	1500 mm
Gas supply pressure	25 mbar
Air supply pressure	25 mbar
Weight	28 kg

*: Stoichiometric conditions

The above mentioned performance data are referred to a burner working at maximum power.
Pressures showed are guidelines only. Gas pressures are referred to methane and LPG.
Performance data and dimensions are guidelines only.

DBC LD MB, DBC LLD MB

Monobloc Air Duct Burners

Duct burners are ideal for generating volumes of clean, hot air.
The turn down ratio of the range goes from 10:1 to 15:1, depending on the model chosen.
Applications include oven, dryers, fume incinerators, and similar industrial equipment.
All models feature an integral combustion air blower mounted on the burner's steel case.
By supplying the correct air volume and pressure to the burner, the blower allows stable operation over a wide range of duct velocities without installing a profile plate around the burner.
Burner installation must be in suction (or slightly in pressure on demand).

FEATURES

- Can be direct spark ignited
- Does not require low-fire bypass air, eliminating the need for piping and check valve
- Simplified set-up with pressure taps for gas, air and chamber
- Inputs up to 750 kW for LD versions and 1500 kW for LLD versions
- Standard executions for methane (LPG and other fuels on request)
- Burner mounting arrangements include duct fixing flange and electrodes

With LLD modules:

Models	Capacity (kW)
DBC LLD MB 6“	75
DBC LLD MB 12“	150
DBC LLD MB 18“	225
DBC LLD MB 24“	300
DBC LLD MB 30“	375
DBC LLD MB 36“	450
DBC LLD MB 42“	525
DBC LLD MB 48“	600
DBC LLD MB 54“	675
DBC LLD MB 60“	750

With LD modules:

Models	Capacity (kW)
DBC LD MB 6“	150
DBC LD MB 12“	300
DBC LD MB 18“	450
DBC LD MB 24“	600
DBC LD MB 30“	750
DBC LD MB 36“	900
DBC LD MB 42“	1050
DBC LD MB 48“	1200
DBC LD MB 54“	1350
DBC LD MB 60“	1500

The size of each model indicates the length of the burner module expressed in inches

Power developed by a 12” module:
LLD = 150 kW
LD = 300 kW

Performance data and dimensions depends on the requirements of the installation.
Contact our sales network to receive more information on this burner range.

DBO

“Open Back” Monobloc Air Duct Burners

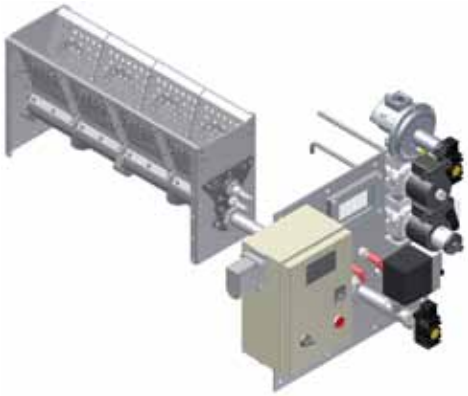

The air-draught burners series “DBO” is used in all those applications where it is required the direct heating of large quantities of air with small increase of temperature.
In this type of burners the combustion air is the same as the process air, and it is taken through the mixing head, by a suitable reduction of the duct section. The increase in speed resulting from the reduction of the duct section allows to have a correct and complete combustion.
The application of this kind of burner is possible only when free oxygen is higher than 19% and when in the process air there are no solvents nor other gases in such a concentration to cause uncontrolled combustion reactions.
This type of heating has an efficiency of 100% because the whole combustion energy is transferred directly to the process (direct exchange combustion).
This direct exchange gas burners series is extremely flexible and can be installed in a large number of industrial processes.

The burner consists of a plate to which the mixing head is fixed (positioned in the centre of the duct). Outside the plate there are the control board with flame control equipment, the interception and regulation gas train and the flame detector.
The mixing heads have a modular design to obtain a distribution of the power on a surface suitable to allow a correct mixing with the process air.
The installation must be done to give a speed of process air of 20 m/s with a pressure drop of approximately 2 mbar.

FEATURES

- Direct spark ignition or indirect by gas pilot integrated on the burner module
- Ionization flame detection by electrode or by UV cell
- Combustion head for natural gas (LPG or other fuels on request)
- Turn down ratio 10:1
- Available with thermoregulator
- Available as packaged execution, with gas train according to EN 746-2 (or other required)
- Easy to install, start and operate

DBC

“Close Back” Monobloc Air Duct Burners

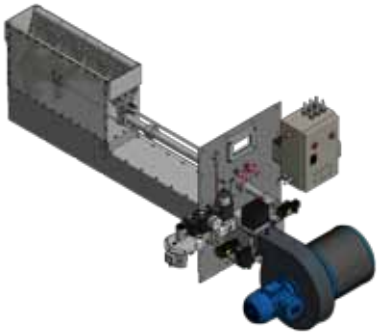

“Close Back” version of the Ecoflam duct burner range is also available.
Contact our sales network to receive more information on this burner range.

OVERALL DIMENSIONS

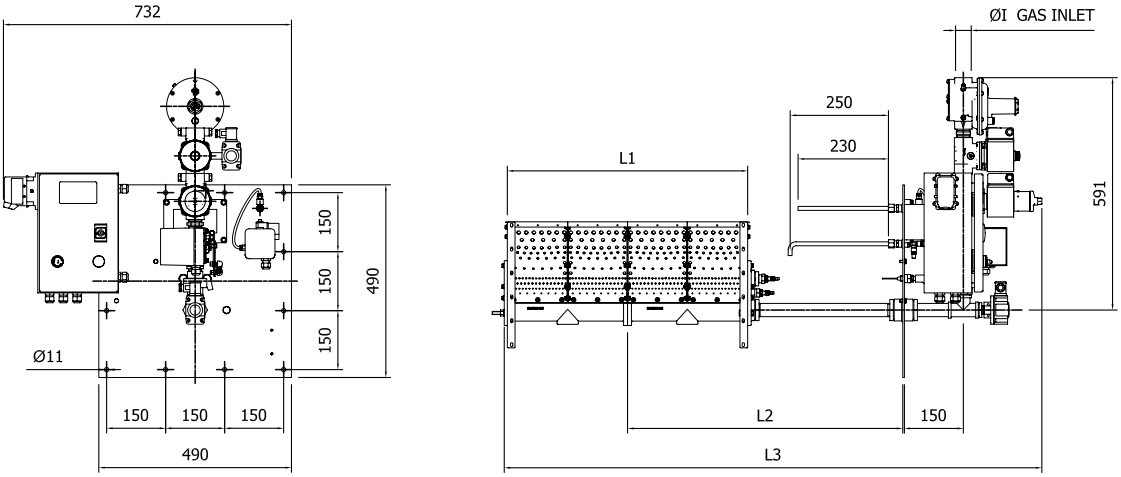

Model	ØI	L1	L2	L3
DBO/S LE LLD 12“	1“	307	548	1063
DBO/S LE LLD 24“	1“	611	700	1367
DBO/S LE LLD 36“	1“	915	852	1671
DBO/S LE LLD 48“	1“	1219	1004	1975

i

2 diameters of the gas supply pipe available depending on the capacity and the length of the burner:
S = small
O = large

2 different widths of the air/gas mixing flaps:
LE = narrow
LLE = large

Power developed by each 12“ module:
LLD = 150 kW
LD = 300 kW
D = 450 kW

TECHNICAL DATA

Model	DBO 12	DBO 24	DBO 36	DBO 48
Minimum output	15 kW	30 kW	45 kW	60 kW
Maximum output	150 kW	300 kW	450 kW	600 kW
Fuel	Natural Gas (PCI 9,6 kW/Nm³) (LPG or other fuels on request)			
Gas supply pressure	70 ÷ 200 mbar			
Burner screen material	Ni-Cr Alloy			
Flame length*	150 mm	200 mm	250 mm	300 mm
Process air pressure drops*	2 mbar			
Upstream burner max temperature	200 °C			
Downstream burner max temperature	300 °C			
Minimum process air oxygen percentage	19%			
Weight (burner cone included)	33 kg	39 kg	46 kg	50 kg

*: with process air speed of 20 m/s

The above mentioned performance data are referred to a burner working at maximum power.
Pressures showed are guidelines only. Gas pressures are referred to methane gas.
Performance data and dimensions are guidelines only.

SSDBS

Self standing air duct burners

Single line

The air duct burners series “SSDBS” is used in every type of industrial processes where it is required the direct heating of ducted air.
The package is composed by a modular burner properly dimensioned and assembled in order to guarantee the best heat exchange between the process air and the combustion products.
At the bottom part of the burner body it will be created an air box that will compose the structure of burner. The air box, made with a modular structure like the burner itself, is composed by reinforced stainless or carbon steel and houses the special process air fans, properly dimensioned for the duct burner feeding.
The gas train is fixed to the burner structure under the airbox and is housed along the entire length of the burner.
The junction box containing the transformer igniter and the terminal board is fixed on a side of the burner structure.
The control panel is supplied separately from the burner (not assembled to the structure) and complete with the multi-polar wire for the connection to the junction box (standard cable length 5 m, other lengths on request).
The ignition of the duct burner is preferentially done with a pilot burner; the two main steps, ignition and operation, are managed by the flame control installed inside the control panel.
The burner unit is supplied with supporting foots for a vertical installation.
No installation works are required in place except connection to gas and electricity.

i Capacity developed on single burner only

FEATURES

- Ignition of the main burner through integrated pilot
- Flame detection with ionization electrode (one for length up to 1200 mm, two for higher burner lengths) or with UV cell (optional)
- Standard executions for methane (LPG and other fuels on request)
- Regulation: gas modulant, with by-pass for discharge procedures of the dryer
- Thermoregulator (optional) floating or analog positionable on the control board
- Complete version with gas train according to EN 746-2 (other regulations if required) and control panel
- Max inlet comburent air: 70°C

APPLICATIONS

- All types of application in which a large exchange surface between exhaust gases and process air is required and to have a fast and uniform mixing, in particular cereals dryers
- All those applications in which a direct exchange gas burner at large regulation and automatic working is required

REGULATION TYPE

Gas Modulant: provides for the adjustment of the fuel only via floating or analog (optional) motorized valve, while the flow rate of the process air is calibrated to allow the combustion at maximum capacity.
Max. ÷ min. ratio 10:1

TECHNICAL DATA

Model	SSDBS 400	SSDBS 600	SSDBS 800	SSDBS 1000	SSDBS 1200	SSDBS 1500	SSDBS 1750	SSDBS 2000
Maximum output	0,4 MW	0,6 MW	0,8 MW	1,0 MW	1,2 MW	1,5 MW	1,75 MW	2,0 MW
Fuel	CH_4 / LPG							
Gas supply pressure	300 ÷ 350 mbar							
Gas inlet	1"	1"1/2	1"1/2	1"1/2	1"1/2	1"1/2	2"	2"
Burner length	640 mm	795 mm	945 mm	945 mm	945 mm	1249 mm	1249 mm	1553 mm
Burner width	270 mm	270 mm	270 mm	270 mm	270 mm	270 mm	270 mm	270 mm
Burner height	1500 mm	1500 mm	1500 mm	1500 mm	1500 mm	2000 mm	2000 mm	2000 mm
Electrical supply	400 V / 50 Hz + N + Ground							
Motor	1 x 1,1 kW	1 x 1,5 kW	1 x 1,5 kW	1 x 1,5 kW	1 x 2,2 kW	1 x 2,2 kW	1 x 2,2 kW	1 x 3 kW

Model	SSDBS 2500	SSDBST 2500	SSDBS 3000	SSDBS 3200	SSDBS 3500	SSDBS 4000	SSDBS 5000	SSDBS 6000
Maximum output	2,5 MW	2,5 MW	3,0 MW	3,2 MW	3,5 MW	4,0 MW	5,0 MW	6,0 MW
Fuel	CH_4 / LPG							
Gas supply pressure	300 ÷ 350 mbar							
Gas inlet	2"	2"	2"	DN65	DN65	DN65	DN65	DN80
Burner length	1857 mm	1486 mm	2465 mm	2465 mm	3073 mm	3681 mm	3681 mm	4593 mm
Burner width	270 mm	337 mm	270 mm	270 mm	270 mm	270 mm	270 mm	270 mm
Burner height	2000 mm	2000 mm	2000 mm	2000 mm	2000 mm	2000 mm	2000 mm	2000 mm
Electrical supply	400 V / 50 Hz + N + Ground							
Motor	1 x 3 kW	1 x 3 kW	2 x 2,2 kW	2 x 2,2 kW	2 x 2,2 kW	2 x 3 kW	2 x 3 kW	3 x 3 kW

i "Open Back" version for these models is available on request

Performance data and dimensions are guidelines only.
Models with difference powers can be evaluated.

SSDBD

Self standing air duct burners

Dual line

The air duct burners series “SSDBD” is used in every type of industrial processes where it is required the direct heating of ducted air.
The package is composed by a modular burner properly dimensioned and assembled in order to guarantee the best heat exchange between the process air and the combustion products.
At the bottom part of the burner body it will be created an air box that will compose the structure of burner. The air box, made with a modular structure like the burner itself, is composed by reinforced stainless or carbon steel and houses the special process air fans, properly dimensioned for the duct burner feeding.
The gas train is fixed to the burner structure under the airbox and is housed along the entire length of the burner.
The junction box containing the transformer igniter and the terminal board is fixed on a side of the burner structure.
The control panel is supplied separately from the burner (not assembled to the structure) and complete with the multi-polar wire for the connection to the junction box (standard cable length 5 m, other lengths on request).
The ignition of the duct burner is preferentially done with a pilot burner; the two main steps, ignition and operation, are managed by the flame control installed inside the control panel.
The burner unit is supplied with supporting foots for a vertical installation.
No installation works are required in place except connection to gas and electricity.

i Capacity developed on two parallel burners

FEATURES

- Ignition of the main burner through integrated pilot
- Flame detection with ionization electrode (one for length up to 1200 mm, two for higher burner lengths) or with UV cell (optional)
- Standard executions for methane (LPG and other fuels on request)
- Regulation: gas modulant, with by-pass for discharge procedures of the dryer
- Thermoregulator (optional) floating or analog positionable on the control board
- Complete version with gas train according to EN 746-2 (other regulations if required) and control panel
- Max inlet comburent air: 70°C

APPLICATIONS

- All types of application in which a large exchange surface between exhaust gases and process air is required and to have a fast and uniform mixing, in particular cereals dryers
- All those applications in which a direct exchange gas burner at large regulation and automatic working is required

REGULATION TYPE

Gas Modulant: provides for the adjustment of the fuel only via floating or analog (optional) motorized valve, while the flow rate of the process air is calibrated to allow the combustion at maximum capacity.
Max. ÷ min. ratio 10:1

TECHNICAL DATA

Model	SSDBD 3000	SSDBD 4000	SSDBD 5000	SSDBD 6000	SSDBD 7000
Maximum output	3,0 MW	4,0 MW	5,0 MW	6,0 MW	7,0 MW
Fuel	CH_4 / LPG				
Gas supply pressure	300 ÷ 350 mbar				
Gas inlet	2"	DN65	DN65	DN80	DN80
Burner length	1249 mm	1857 mm	2465 mm	3073 mm	3681 mm
Burner width	890 mm	890 mm	890 mm	890 mm	890 mm
Burner height	2000 mm	2000 mm	2000 mm	2000 mm	2000 mm
Electrical supply	400 V / 50 Hz + N + Ground				
Motor	2 x 2,2 kW	2 x 3,0 kW	2 x 3,0 kW	4 x 2,2 kW	4 x 3,0 kW

Model	SSDBD 8000	SSDBD 9000	SSDBD 10000	SSDBD 11000	SSDBD 14000
Maximum output	8,0 MW	9,0 MW	10,0 MW	11,0 MW	14,0 MW
Fuel	CH_4 / LPG				
Gas supply pressure	300 ÷ 350 mbar				
Gas inlet	DN80	DN100	DN100	...	...
Burner length	3681 mm	4593 mm	4593 mm	...	...
Burner width	890 mm	890 mm	890 mm	890 mm	890 mm
Burner height	2000 mm	2000 mm	2000 mm	2000 mm	2000 mm
Electrical supply	400 V / 50 Hz + N + Ground				
Motor	4 x 3,0 kW	6 x 3,0 kW	6 x 3,0 kW	...	...

i “Open Back” version for these models is available on request

Performance data and dimensions are guidelines only.
Models with different powers can be evaluated.

HGC

Hot air generators

The “HGC” air draught generator line is used in all those applications where it is required a direct air heating during industrial process.
The assembly is made up of a duct section with suitable materials resistant to temperature and/or treated fluid, a “DBC” burner correctly dimensioned and assembled, in order to allow the best exchange between combusted gas and process air.
External to the duct there are the control board with flame control equipment, the interception and regulation gas train and the flame detector.
Comburent air can be supplied by an electro-blowing fan suitable dimensioned, which carries the comburent to the mixing head through a duct.
The combustion air can be obtained also by process, using an “Open Back” module (DBO). In this case, a part of the process fluid is conveyed to the mixing head by means of an increase in speed, due to a narrowing of the channel in which the burner is located. This application is possible only when oxygen level is higher than 19% during the process fuel.
This direct exchange gas burner series is extremely flexible and allows an installation in a large number of operating conditions, classified according to the working temperature and to the operation type of fuel and comburent flow.

“Open Back”:	T max (upstream burner)	= 100 °C
	T max (downstream burner)	= 300 °C
“Close Back”:	T max (upstream burner)	= 200 °C
	T max (downstream burner)	= 500 °C

FEATURES

- Main module direct electrical ignition by electrode; or indirect by a pilot incorporated in burner structure
- Flame detection with ionization electrode or UV cell
- Standard executions for methane. LPG and other gases on request
- Gas modulant regulation
- Available as complete version with gas train and control board in compliance with EN 746-2 (other regulations if required)

APPLICATIONS

- All types of application in which a large exchange surface between combustion gas and process air is required, and it’s necessary a fast and uniform mixing
- Ceramic, bricks, refractory: intermittent and continuous dryers
- Surfaces treatment: painting kilns, enamelling kilns and dryers
- Printing and packing: air heaters for rotogravures, flexographic and coupling and adhesive coating machines
- Food: cereal, fodder and tobacco dryers, roasters
- All intermittent and continuous dryers

REGULATION TYPE

Gas Modulant: provides for the adjustment of the fuel only via floating or analog (optional) motorized valve, while the flow rate of the combustion air is calibrated to allow the combustion at maximum capacity.
Max. ÷ min. ratio 10:1

All the typologies above mentioned refer to generators with combustion air supplied by an electro-blowing fan. In case the installation is an “Open Back” type, any variation in the process air flow affects the speed of the combustion agent, that should be consequently adjusted by the means of diaphragms, with the aim to guarantee a speed between 10 and 20 m/s all along the length of the burner head.

GENERATOR CONFIGURATION

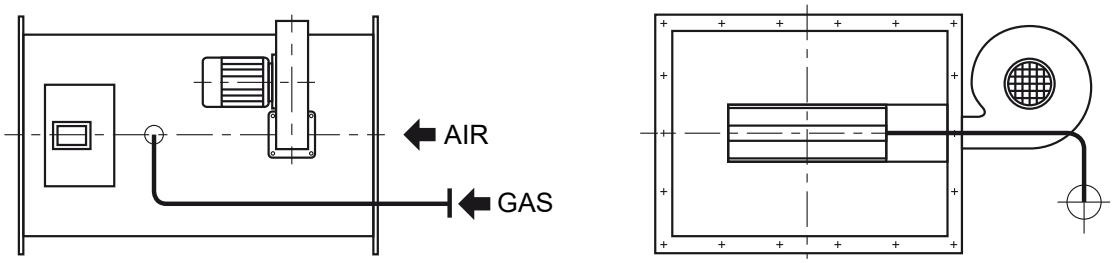

Orientations showed in the pictures below are the most commonly used, but they can be changed following the customer requests in order to satisfy the installation requirements.
Our Technical Service is always at your disposal for the necessary explanations and assistance to optimize the installations.

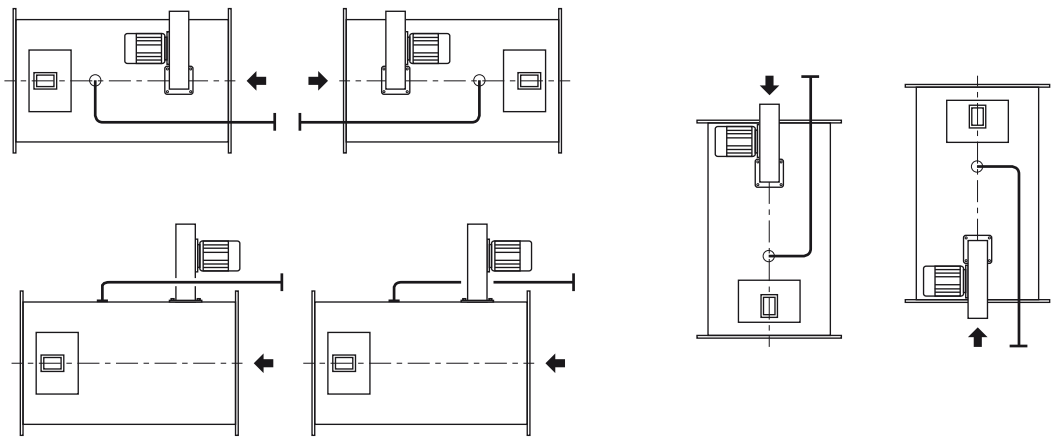

Examples of applications

TEXTILE

PAPER

DRYERS

INDUSTRIAL PAINTING/COATING
AUTOMOTIVE

HEAT SURFACE TREATMENT

METALLURGICAL

AUTOMATION AND SUPERVISING

ENVIRONMENT

FOOD

TEXTILE

Working temperatures: 100°C ÷ 250°C
Types of burners:
- Radiant tube burners
- High ratio monoblock burners

Model of the main burners:
- MVRT (properly equipped)
- MB LMT

Type of combustion systems:
- Systems of more burners working together (possibility to order the radiant tube also)

- **Machine:** dryer
- **Purpose:** drying of textile printing
- **Burner:** MB LMT TR 360
- **Total power installed:** 360 kW

- **Machine:** dryer
- **Purpose:** drying of textile printing
- **Burner:** MB LMT TR 235
- **Total power installed:** 235 kW

- **Machine:** stenter
- **Purpose:** drying of textile printing
- **Burner:** MB LMT 235
- **Total power installed:** 235 kW

PAPER

Working temperatures: 100°C ÷ 200°C
Types of burners:
- Radiant tube burners
- High ratio monoblock burners
- Duct burners

Model of the main burners:
- MVRT (properly equipped)
- DBC / DBO / HGC

Type of combustion systems:
- systems of more burners working together
- duct burners systems equipped for the specific use

- **Machine:** Tissue Yankee Hood
- **Purpose:** drying of “Tissue” paper
- **Burner:** HGC 2100 SX
- **Total power installed:** 2440 kW

- **Machine:** oven for resin drying
- **Purpose:** drying resin for plastic laminates
- **Burner:** MB LMT TR 360
- **Total power installed:** 360 kW

- **Machine:** oven for resin drying
- **Purpose:** drying resin for plastic laminates
- **Burners:** 3x MB LMT TR 360
- **Total power installed:** 1440 kW

DRYERS

Working temperatures: 80°C ÷ 250-300°C
Types of burners:
- Duct burners
- High ratio monoblock burners
- Medium velocity burners

Model of the main burners:
- DBC / DBO / HGC
- MVRT

Type of combustion systems:
- hot gas generator
- systems of more burners working together

- **Machine:** dryer
- **Purpose:** drying of rock wool
- **Burners:** 5x HGC 750 LB40 O-SX
- **Total power installed:** 1440 kW

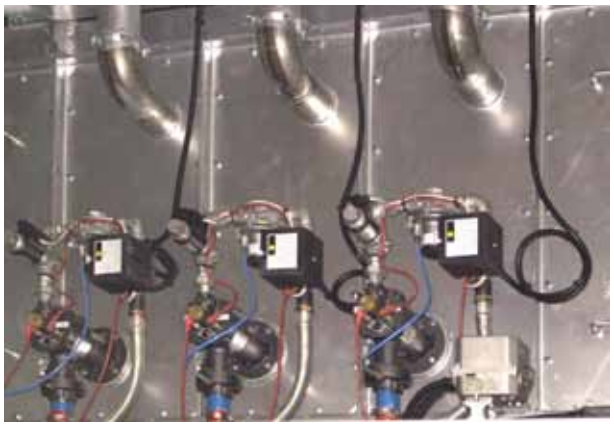

- **Machine:** dryer
- **Purpose:** drying of rubber molds
- **Burners:** 3x MVRT 140
- **Total power installed:** 480 kW

- **Machine:** painting dryer
- **Purpose:** drying of coated sheets
- **Burner:** DBO 1200
- **Total power installed:** 1200 kW

INDUSTRIAL PAINTING / COATING AUTOMOTIVE

Working temperatures: 20°C ÷ 250°C ÷ 850°C
Types of Burners:
- Duct burners
- High ratio monoblock burners

Model of the main burners:
- DBC / DBO / HGC
- MB LMT

Type of combustion systems:
- supply of big surface duct burner fitted for large quantity of process air to be installed at service of the preparation and painting zones, customized of the main burners suitable for the oven installation
- incinerator systems for VOC and other toxic waste gases

- **Machine:** drying oven
- **Purpose:** drying of painting of plastic parts
- **Burner:** MB LMT 360
- **Total power installed:** 360 kW

- **Machine:** hot air supply unit for spray booth
- **Purpose:** drying of painting of metal parts
- **Burner:** DBO 2600
- **Total power installed:** 2600 kW

- **Burner:** DBO 2600
- **Total power installed:** 2600 kW

HEAT-SURFACE TREATMENT

Working temperatures: 100°C ÷ 600°C
Types of burners:
- Radiant tube burners
- Medium velocity burners
- Duct burners

Model of the main burners:
- MVRT (Properly equipped)
- HTC / HTS
- DBC / DBO / HGC

Type of combustion systems:
- systems of more burners working together (possibility to order the radiant tube indirect and for immersion also)
- single burners fully equipped and ready for operating

- **Machine:** paint dryer
- **Purpose:** drying of painted parts finishing
- **Burner:** DBC 24
- **Total power installed:** 300 kW

- **Machine:** paint dryer
- **Purpose:** air treatment
- **Burner:** DBC 1500
- **Total power installed:** 1500 kW

- **Burner:** HTC 3500 S/0
- **Total power installed:** 3500 kW

METALLURGICAL

Working temperatures: 600°C ÷ 900°C
Types of burners:
- Medium/High velocity burners

Model of the main burners:
- HTC / HTS properly equipped

Type of combustion systems:
- Systems of more burners working together

- **Machine:** cementation oven
- **Purpose:** heat treatment of mechanical parts
- **Burners:** 4x HTS 300 S/90
- **Total power installed:** 2000 kW

- **Machine:** annealing oven
- **Purpose:** cylinder annealing
- **Burners:** 16x HTS 190 S/90
- **Total power installed:** 1650 kW

- **Machine:** annealing oven
- **Purpose:** cylinder annealing
- **Burners:** 16x HTS 190 S/90
- **Total power installed:** 1650 kW

AUTOMATION AND SUPERVISING

Working temperatures: any
Types of burners: any
Model of the main burners: any

Description:
Control panels engineered for the management of the all different industrial systems, combustion or automation, are well integrated and showed on our synoptic (local control trough touch-screen or remote control trough personal computer)

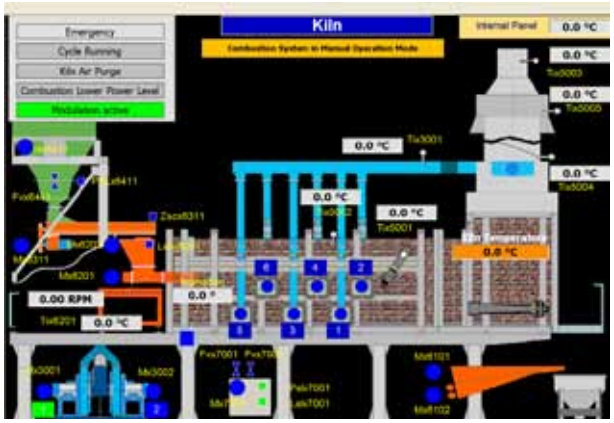

Notes

Ecoflam

HEAD OFFICE:
Via Roma, 64
31023 Resana (TV)

REGISTERED OFFICE:
Viale A. Merloni, 45
60044 Fabriano (AN)

Tel.: +39 0423 719500
Fax: +39 0423 719580
Email: export@ecoflam-burners.com

Company subject to the direction and coordination of Ariston Thermo Group, Via A. Merloni, 45 - 60044 Fabriano (AN) - CF 01026940427

Version 1.2 - 22/09/2021

ECOFLAM Bruciatori S.p.A. reserve the right to make any adjustments, without prior notice, which is considered necessary or useful to its products, without affecting their main features.