HEATING CATALOGUE

www.elco-burners.com

HEATING CATALOGUE

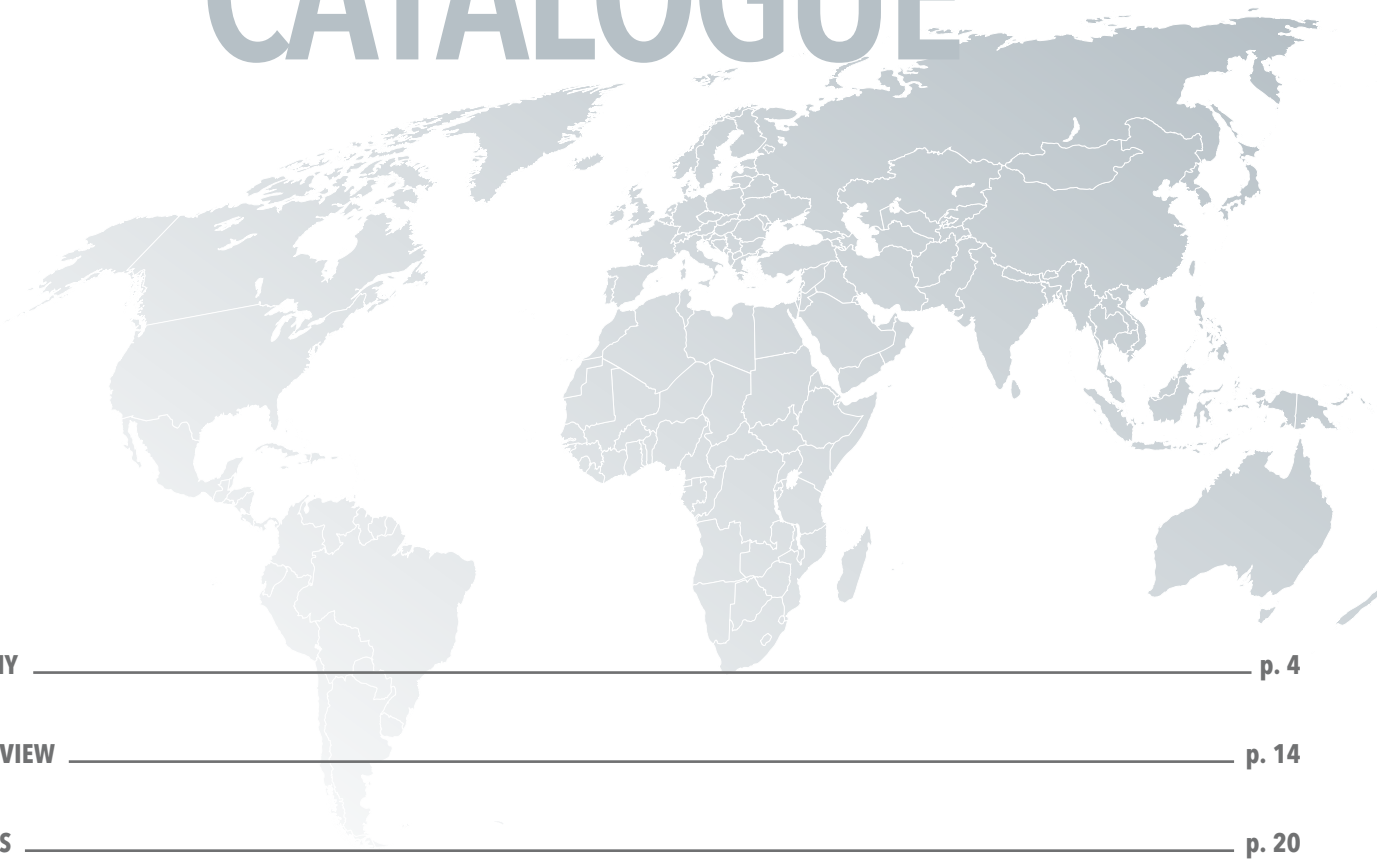

THE COMPANY — p. 4

RANGE OVERVIEW — p. 14

GAS BURNERS — p. 20

DUAL FUEL BURNERS — p. 106

LIGHT OIL BURNERS — p. 120

MODULATION KIT — p. 156

OPTIONS — p. 158

CUTTING-EDGE BURNERS FOR HEATING AND INDUSTRIAL APPLICATIONS

Innovative soul

Being a specialist in burners conception and manufacturing, ELCO is nowadays one of the leaders in the combustion technology. By linking a strong innovative ability to a developing will, ELCO conceives performing and reliable burners that respect the environment as well as corresponding services, in order to establish a lasting relationship with its customers.

The mission

ELCO always looks for the best technologies and develops new ones to improve the efficiency of its solutions. Our R&D Laboratories are committed to develop innovative technological solutions allowing to:

- optimize the running of the installations lowering the use of primary energy;
- ease professional's work improving human machine interface and maintenance;
- preserve the environment lowering acoustic and exhaust gas emissions.

Product range

Our experience at combustion disposal
in a complete range of burners from 11 kW to 80 MW:

VECTRON
11 - 2300 kW
Gas, light oil and dual fuel

PROTRON
15 - 550 kW
Gas and light oil

NEXTRON
250 - 11200 kW
Gas, light oil and dual fuel

EK EVO
250 - 13000 kW
Gas and dual fuel

N
1300 - 22000 kW
Gas, light oil and dual fuel

Professional staff

Taking advantage of a staff composed of technicians and engineers with a long experience, ELCO is able to provide professional support to the customer in order to define together the best solution and to develop and manage the project through its entire life-cycle.
ELCO Service activities define the standards in the market and each customer can rely on high performance and reliabile products.

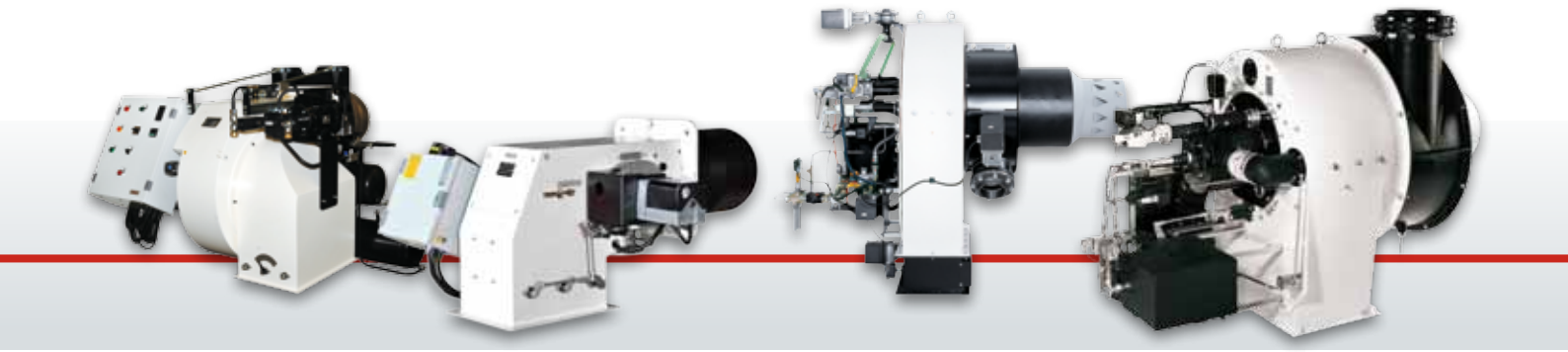

HO/GHO-TRON
68 - 17000 kW
Heavy oil and
dual fuel

D-TRON
230 - 34000 kW
Gas, light oil, heavy oil
and dual fuel

EK-DUO
600 - 16000 kW
Gas, light oil and
dual fuel

RPD
500 - 80000 kW
Gas, light oil, heavy oil
and dual fuel

Worldwide network

Capitalising more than 80 years of working experience, ELCO has been capable to build loyal partnerships and today can count on reliable Partners all over the World.
Combining an instinctively global perspective with a genuinely multicultural approach, ELCO today offers skilled and experienced experts available in more than 70 Countries.

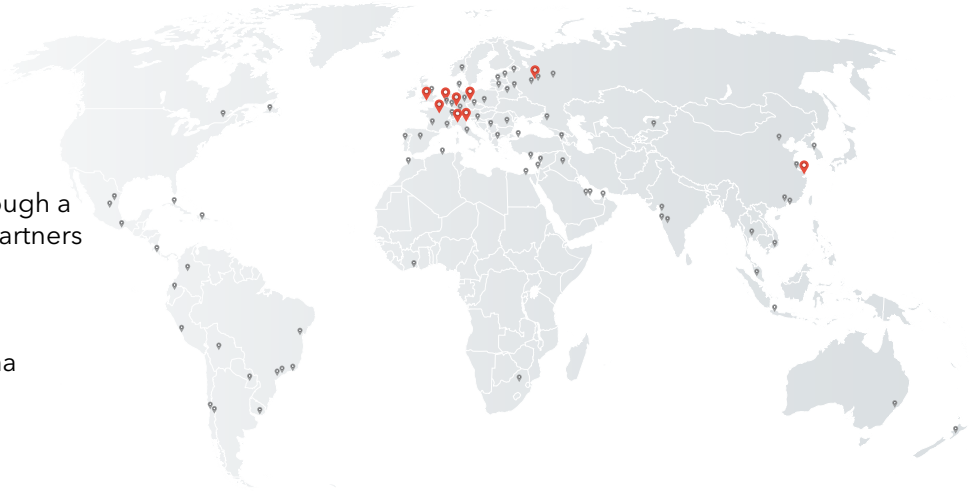

In Europe

3 production plants
6 commercial branches
Strong commercial presence through a network of reliable dealers and partners

Worldwide

2 Sales Offices in Russia and China
Distribution in over 70 Countries

ELCO is developing a worldwide network of valuable Service Partners, consisting of well-trained local engineers, to carry out its service operations.

Time to market

To promptly deal with the requests of an ever changing market, ELCO has adopted a finished products and spare parts warehouse of over 8000 square meters.
Quick response to customer requests and consistent warehouse availability allow to reduce the delivery time and give a better support to the end user.

Reliable supply of spare parts

Spare parts have always had a great importance inside the ELCO world. Considering the high amount of parts involved in every single product, some of these parts might naturally need to be substituted ELCO can count on a International network ELCO offering original spare parts in order to guarantee the highest quality, reliability and safe continued operation of the appliance.

Solutions for every need

A long presence in the international market has allowed ELCO to build a strong experience in burner customization and to develop products that are able to guarantee reliability, quality and high performance even in the most extreme working conditions.

Competent advice

Your contacts at ELCO and its partners are recognized experts with years of experience.
Our worldwide support starts from concept creation to planning, design and project management up to commissioning and on-going operation of the plant throughout its life cycle.
As an ELCO customer, you can rely on your installation to perform reliably. Our guarantee is backed up by a service that sets standards in our field.

References

ELCO has been chosen as the ideal partner from worldwide companies to design installations where technical specifications and environmental conditions require a specific design.
In the next pages you will find a selection of our international references.

Worldwide references

Stuttgart, Germany

Burner type:
1x EK-DUO 2.550 GL-EUF
2x EK-DUO 2.700 GL-EUF

Hamburg, Germany

Burner type:
2x N7.4500 GL-E

Beijing, China

Burner type:
2x N7.4500 G-R
2x N7.3600 G-R

Khanty-Mansiysk, Russia

Burner type:
4x N10.12000 G-E

Stavanger, Norway

Burner type:
2x EK-DUO 3.1600 G-E

Beijing, China

Burner type:
1x EK EVO 8.5800 G-EU3
2x EK EVO 8.7100 G-EU3

Hohhot, Inner Mongolia, China

Burner type:
2x EK EVO 6.2900 G- E

Amsterdam, Netherlands

Burner type:
2x RPD 60 GL-EU

Fredrikstad, Norway

Burner type:
1x N9.10400 G-EU3

Beijing, China

Burner type:
4x RPD 100 G-EU

Technologies and Systems

To constantly improve its products, ELCO is committed to develop innovative technological solutions allowing to optimize the running of the installations, to ease professional's work, and naturally to preserve the environment. In order to provide quick responses to its market's exigencies, the range of ELCO burners is entirely conceived around a consistent combination of Systems.

MDE2 System

Permanent communication of information easy to use

Equipped with the MDE2 System, the universal language Elcogram and the 5-button keyboard, ELCO burners adjust themselves and constantly communicate to professional operators:

- real time information about each ignition and during the running;
- statistical information about burner operation recorded during the whole year before the maintenance operations.

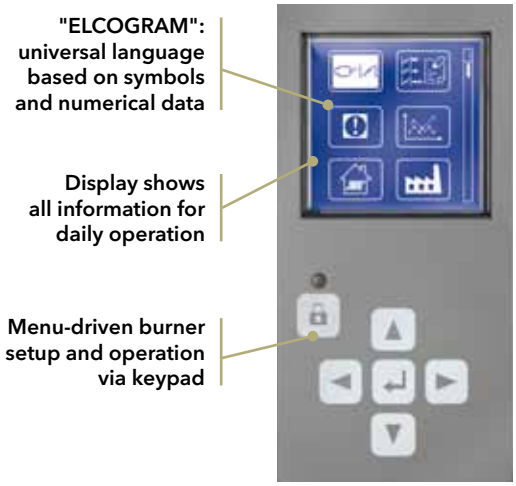

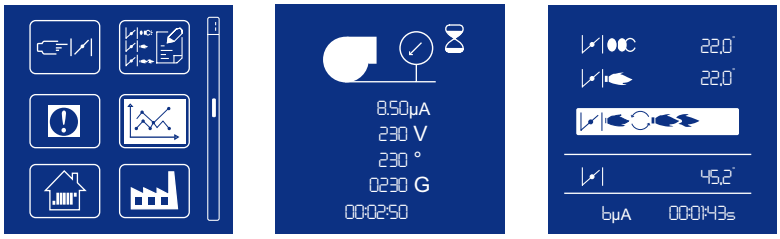

Elcogram, a universal language

As ELCO products are distributed worldwide, the company has developed a universal language composed of pictograms and numerical data. The pictograms use the majority of the symbols used on the wiring diagrams which are recognised and understood by all Nations. This ensures that information is easier to read than ever before.

GEM System

Electronic burner control: high safety and low costs

The use of electronic technologies in burner control systems helps to reduce running costs, improve reliability of operation and lower pollutant emissions. The electronic combustion manager used on ELCO burners are responsible not only for burner control (formerly the task of the traditional automatic combustion control unit) but also for fuel/air regulation. Data stored electronically has replaced the mechanical characteristic curve and help to achieve an unprecedented level of precision in air/fuel ratio regulation across the burner's entire control range, a prerequisite for efficient, energy- and cost-saving operation.
The GEM System controls the position of one or more activators simultaneously.
The servomotors of the air flow and oil components are controlled by a microprocessor which contains set points defined for each load curve. An additional advantage of the GEM is that it provides specific information on all the commands and states of the overall system: these can be accessed directly or by remote control.
The digital programming is user-friendly, it is carried out through the display of the MDE2 System or through a PC by using a simple procedure facilitated by easy instructions in a clear language.

AGP System

An outstanding technology for gas burners

Developed and produced by ELCO, the AGP System (proportional air-gas) provides:
- perfect stability of the air-gas mixture;
- a constantly high CO_2 content over the whole burner power range;
- precise control of air excess, which is important for high-efficiency operation, in particular for condensing generators.

The AGP measures: the gas pressure downstream of the gas train, the air pressure behind the flame holder, the furnace backpressure.
Any variations in the three pressures are immediately and simultaneously recorded by the system which automatically restores the correct gas/combustion air ratio.
AGP maintains a constant gas/combustion air ratio even in the presence of:
- positive or negative variations in the gas pressure;
- variations in air flow due to changes in the electrical supply voltage or fouling of the ventilation system;
- variations in the furnace and flue draft pressure on start-up and during load changes.

Variatron

Speed regulation: noise reduction and energy saving

To improve the performance of heating or industrial systems, ELCO applies Variatron (fan speed control). Conventionally, the air in modulating burners is regulated by an air flap. In the partial load range, a large amount of the air pressure generated by the ventilator goes to waste.
With speed regulation, the speed of the combustion-air fan is varied continuously depending on the burner output required. Full speed is reached only at maximum burner output. In the predominant partial load range, thelower speed translates into significant reductions in power consumption and noise emissions. The Variatron operates in phase with the air damper both with the GEM System and with the AGP System, which guarantees a combustion with minimum air excess by continuously monitoring all operating conditions.
Application of the Variatron to ELCO burners results in:
- electrical consumption savings of the order of 50%;
- turndown ratio of up to 1:10, resulting in perfect adaptation to system requirements and improvement in average seasonal efficiency, in particular with condensing or low-temperature boilers or specific processes;
- silent start-up and average overall noise reduction between 2 dB(A) (at maximum power) and 12 dB(A) (at minimum power).

Low Noise System

Increase the comfort in-use and protect the environment

Among all the harmful things that men have to bear with every day, the most annoying is noise, which is difficult to reduce and expensive to get rid of.
This is the reason why ELCO has developed quiet burners both by selecting sound absorbent materials, and by treating each noise sources internally. The main noise comes from the air intake and the air mixing in the fan wheel: all the ELCO burners are equipped with a sound trap on the air intake channel leading to the fan.
This brings the acoustic level to a compatible value in respect of the environment.

Technologies and Systems

ELCO R&D Laboratories have capitalised more than 80 years of experience in the field of standard burners (with normal emission) in order to develop a parallel range of low emissions burners. In addition to scrupulously respecting the limits prescribed by European directives regulating pollutant emission, the goal of ELCO is to guarantee values largely below those established by regulations.
In order to reach these results the low NOx burner range takes advantage of innovative combustion technologies.

Diamond Head

Low emissions and reliable operation

The principle of the Diamond Head gas combustion is based on the internal recirculation of the combustion flue gases. These are partially drawn into the base of the flame via triangular openings positioned at the end of the combustion head.
The position and geometry of the gas injectors are such that a significant quantity of combustion flue gas is drawn in and rapidly mixed with air and gas at the root of the flame. This mixture crosses the main reaction area, slowing the combustion, which resulted in lowering the main flame temperature.
The result of this staging combustion is a significant reduction in the formation of thermal nitrogen oxides.

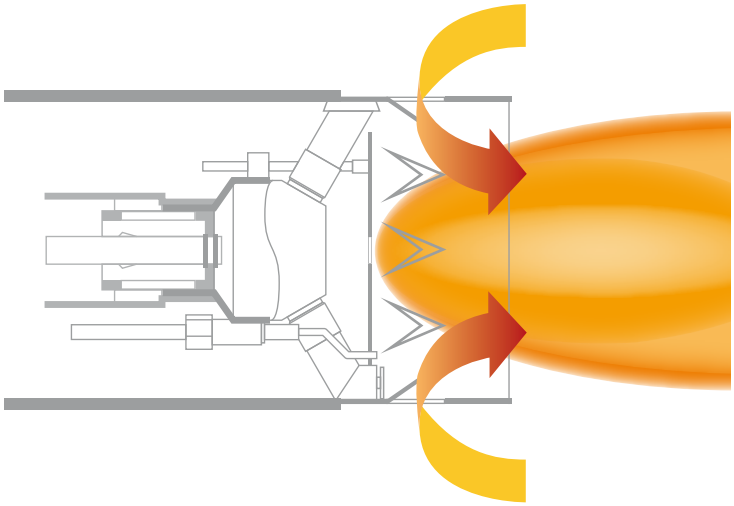

The advantage of this internal recirculation technique is an automatic adjustment to the quantity of recycled combustion flue gases: the volume of the flame is always as low as possible, which has a very minor effect on the nominal power of the generator, unlike external recirculation systems.

Free Flame

The pinnacle of low-polluting burner engineering

The principle of the Free Flame oil combustion is based on rapid gasification of the fuel by recirculating the combustion gases internally and allows the fuel-air to mix quickly.
Once the fuel has been vaporized, it will burn and stabilize 30 centimetres from the combustion head.
The flame appears to "float freely" hence the name "Free Flame". The heat absorbed by the gasification oil will cause a significant drop in the flame's temperature and a decrease in the formation of the thermal nitrogen oxide.

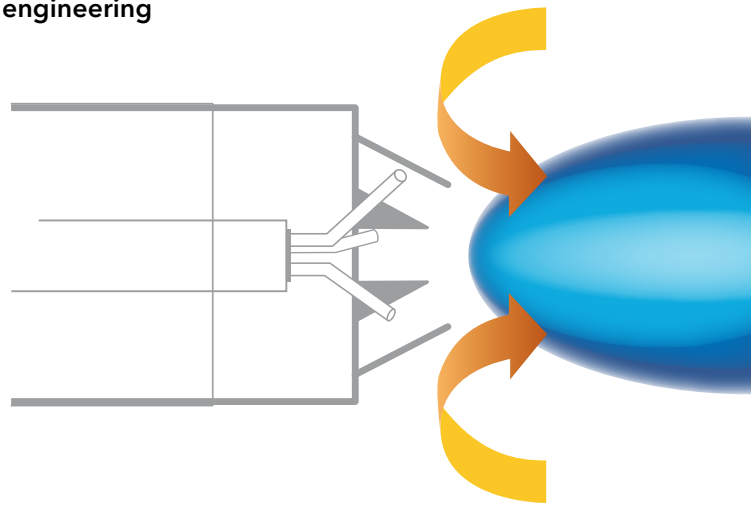

Technical assistance

Commissioning

For safe and efficient operation of your burner system it is very important that the burner is commissioned by an expert. The combustion will be optimally adjusted over the whole power range of the burner, and all the safeties will be tested. Of course you will receive a report. ELCO's service technicians are able, like no other, in performing this job adequate and competent, to run your installation worry-free.

Maintenance and inspection

The burner is a crucial part of the installation. To keep your installation in good conditions, it is important to maintain the burner periodically. It is also very important to inspect all the safeties to ensure that your system operates safely.
Fortunately, you can rely on the professional services of ELCO which can perfectly perform this service for you.

The Burner Academy

In order to respond to the needs of our customers we created the Burner Academy, a real school where the know-how of our technicians is diffused to our partners.
We provide the opportunity for boiler room personnel, operators and engineers to attend a series of training sessions carried out on our test bench by highly qualified instructors, who held the courses in English, German, French, Italian and Dutch language.
The Burner Academy uses various training locations where boilers are installed and where people can be trained in theory and in practice. We offer courses at different levels and also the possibility to handle all your needs in a customer-specific training.

Worldwide Service Network

In Western Europe, ELCO has a well organized service network.
Outside Western Europe ELCO uses a network of partners, consisting of well-trained local engineers, to carry out its service operations. These technicians are able to perform both commissioning and local service and they do it in a very professional way.

Designation

Burner body

Operation type
- **-** = 1 stage
- **P** = 1 stage standard with pre-heater (light oil)
- **D** = 2 stages
- **DP** = 2 stage progressive/modulating pneumatic Low NOx (gas) / 3 stages (light oil)
- **DP R** = 2 stage progressive/modulating pneumatic
- **V** = 2 stage progressive/modulating pneumatic + fan speed control
- **VD** = 2 stages PWM Low NOx (light oil)
- **M** = 2 stage progressive/modulating electronic Low NOx
- **M R** = 2 stage progressive/modulating electronic
- **M V** = 2 stage progressive/modulating electronic Low NOx + fan speed control
- **M V R** = 2 stage progressive/modulating electronic + fan speed control

Platform
1 ... 6 = Ariston BCU
0x = Honeywell BCU

Size
Max power (kW)

VG 2.210 M /TC KN 6H

Fuel and combustion type
- **G** = Natural gas
- **GL** = Dual fuel (natural gas/light oil)
- **L** = Light oil standard
- **B** = Light oil Low NOx Blue flame
- **E** = Light oil Low NOx Yellow flame

Additional equipment
- **/TC** = Tightness control
- **/PED** = PED equipped
- **/FGR** = FGR equipped

Head lenght
- **KN** = short
- **KM** = medium
- **KL** = long

Electrical supply
- **-** = 230V / 50Hz
- **6H** = 230V / 60Hz

Gas train

Valve nominal diameter
1/2"...2" or 50...100 mm

Gas train connection diameter
Rp1/2"...Rp2" (when threaded) or DN50...100 (when flanged)

d335 - 1"1/2 - Rp2" /TC KN 110

Valve manufacturer
- **d** = Dungs
- **s** = Siemens
- **h** = Honeywell

Operation type
- **1** = 1 stage
- **2** = 2 stages
- **3** = Pneumatic
- **4** = Electronic

Series
Progressive number

Additional equipment
/TC = Tightness control

Head lenght
- **KN** = short
- **KM** = medium
- **KL** = long

Electrical supply
- **-** = 230V / 50Hz
- **110** = 110-120 V/50-60 Hz

Other burner versions

- 60 — 60 Hz version
- TC — Version with tightness control
- VENT — Versions for continuous ventilation and post-ventilation
- PED — PED version for continuous operation
- FGR — FGR version (ultra low NOx)

Gas range

Main features

- Fuels:
  - natural gas (G20/G25, H_u = 8,83…10,35 kWh/m³);
  - LPG (G31, H_u = 25,89 kWh/m³).
- Cubic type architecture allowing optimal accessibility, maximum compactness, minimum weight.
- Complete electrical equipment in the body of the burner with MDE2 System and display: this ensures that information is easier to read than ever before, constantly giving real-time information to professional operators, during the commissioning, the operation and at each operation cycle.
- Quiet ventilation and reduced electrical consumption.
- Closing of the air flap at burner shut-down.
- Maintenance operation are simplified: the combustion parts can be quickly removed, easily cleaned and, even when they are disassembled, they easily get back to their position after all the servicing work.
- Gas train factory assembled and tested for tightness and electrical security.
- All products are in compliance with EN676 European standards and with the following directives:
  – 2014/35/UE Low Voltage Directive
  – 2014/30/UE EMC Directive
  – 2009/142/CEE Gas Appliances Directive
  – 2006/42/EC Machinery Directive

ONE STAGE Low NOx

VG1.40 /TC	60	Vent	14,5 ... 40 kW	**p. 20**
VG1.55 /TC	60	Vent	35 ... 55 kW	**p. 20**
VG1.85 /TC	60	Vent	45 ... 85 kW	**p. 20**
VG2.140	60	Vent	80 ... 140 kW	**p. 22**
VG2.200	60	Vent	130 ... 200 kW	**p. 22**

0 50 100 150 200 250 kW

TWO STAGES Low NOx

VG01.85 D	60	Vent	45 ... 85 kW	**p. 24**
VG2.120 D	60	Vent	40 ... 120 kW	**p. 26**
VG2.160 D	60	Vent	60 ... 160 kW	**p. 26**
VG2.210 D	60	Vent	80 ... 210 kW	**p. 26**
VG3.290 D	60	TC Vent	95 ... 290 kW	**p. 28**
VG3.360 D	60	TC Vent	120 ... 360 kW	**p. 28**
VG4.460 D	60	TC Vent	150 ... 460 kW	**p. 32**

0 100 200 300 400 500 kW

TWO STAGE PROGRESSIVE/MODULATING PNEUMATIC Low NOx

VG2.120 DP	60	Vent	40 ... 120 kW	**p. 36**
VG2.160 DP	60	Vent	60 ... 160 kW	**p. 36**
VG2.210 DP	60	Vent	80 ... 210 kW	**p. 36**
VG3.290 DP	60	TC Vent	70 ... 290 kW	**p. 38**
VG3.360 DP	60	TC Vent	80 ... 360 kW	**p. 38**
VG4.460 DP	60	TC Vent	100 ... 460 kW	**p. 42**
VG4.610 DP	60	TC Vent	130 ... 610 kW	**p. 42**
VG5.950 DP	60	TC Vent	170 ... 950 kW	**p. 46**
VG5.1200 DP	60	TC Vent	250 ... 1160 kW	**p. 46**
VG6.1600 DP /TC	60	Vent	300 ... 1600 kW	**p. 50**
VG6.2100 DP /TC	60	Vent	400 ... 1900 kW	**p. 50**

0 500 1000 1500 2000 kW

TWO STAGE PROGRESSIVE/MODULATING PNEUMATIC

VG5.950 DP R	60 TC VENT	150 ... 1000 kW	p. 54
VG5.1200 DP R	60 TC VENT	200 ... 1200 kW	p. 54
VG6.1600 DP R /TC	60 VENT	200 ... 1700 kW	p. 58
VG6.2100 DP R /TC	60 VENT	300 ... 2300 kW	p. 58

0 500 1000 1500 2000 2500 kW

TWO STAGE PROGRESSIVE/MODULATING PNEUMATIC Low NOx + fan speed control

VG2.210 V	VENT	80 ... 210 kW	p. 62
VG3.290 V	TC VENT	70 ... 290 kW	p. 64
VG3.360 V	TC VENT	80 ... 360 kW	p. 64
VG4.460 V	TC VENT	100 ... 460 kW	p. 68
VG4.610 V	TC VENT	130 ... 610 kW	p. 68

0 250 500 750 1000 kW

TWO STAGE PROGRESSIVE/MODULATING ELECTRONIC Low NOx

VG2.120 M /TC	VENT	30 ... 120 kW	p. 72
VG2.160 M /TC	VENT	40 ... 160 kW	p. 72
VG2.210 M /TC	VENT	40 ... 210 kW	p. 72
VG3.290 M /TC	VENT	50 ... 290 kW	p. 74
VG3.360 M /TC	VENT	60 ... 360 kW	p. 74
VG4.460 M /TC	VENT	86 ... 460 kW	p. 78
VG4.610 M /TC	VENT	90 ... 610 kW	p. 78
VG5.950 M /TC	VENT PED	160 ... 900 kW	p. 82
VG5.1200 M /TC	VENT PED	160 ... 1160 kW	p. 82
VG6.1600 M /TC	VENT PED	240 ... 1600 kW	p. 86
VG6.2100 M /TC	VENT PED	260 ... 1900 kW	p. 86

0 500 1000 1500 2000 kW

TWO STAGE PROGRESSIVE/MODULATING ELECTRONIC Low NOx + fan speed control

VG5.950 M V /TC	VENT PED	160 ... 900 kW	p. 90
VG5.1200 M V /TC	VENT PED	160 ... 1160 kW	p. 90
VG6.1600 M V /TC	VENT PED	240 ... 1600 kW	p. 94
VG6.2100 M V /TC	VENT PED	260 ... 1900 kW	p. 94

0 500 1000 1500 2000 kW

TWO STAGE PROGRESSIVE/MODULATING ELECTRONIC

VG5.950 M R /TC	VENT PED	150 ... 1000 kW	p. 98
VG5.1200 M R /TC	VENT PED	200 ... 1200 kW	p. 98
VG6.1600 M R /TC	VENT PED	200 ... 1700 kW	p. 102
VG6.2100 M R /TC	VENT PED	300 ... 2300 kW	p. 102

0 500 1000 1500 2000 2500 kW

TWO STAGE PROGRESSIVE/MODULATING ELECTRONIC + fan speed control

VG5.950 M V R /TC	VENT PED	150 ... 1000 kW	p. 106
VG5.1200 M V R /TC	VENT PED	200 ... 1200 kW	p. 106
VG6.1600 M V R /TC	VENT PED	200 ... 1700 kW	p. 110
VG6.2100 M V R /TC	VENT PED	300 ... 2300 kW	p. 110

0 500 1000 1500 2000 2500 kW

Dual fuel range

Main features

- Fuels:
  - natural gas (G20/G25, H_u = 8,83…10,35 kWh/m³);
  - light oil (viscosity 6 mm²/s at 20°C, H_u = 11,86 kWh/kg).
- Cubic type architecture allowing optimal accessibility, maximum compactness, minimum weight.
- Complete electrical equipment in the body of the burner with MDE2 System and display: this ensures that information is easier to read than ever before, constantly giving real-time information to professional operators, during the commissioning, the operation and at each operation cycle.
- Maintenance operation are simplified: the combustion parts can be quickly removed, easily cleaned and, even when they are disassembled, they easily get back to their position after all the servicing work.
- Quiet ventilation and reduced electrical consumption.
- Closing of the air flap at burner shut-down.
- Gas train factory assembled and tested for tightness and electrical security.
- All products are in compliance with EN676 and EN267 European standards and with the following directives:
  – 2014/35/UE Low Voltage Directive
  – 2014/30/UE EMC Directive
  – 2009/142/CEE Gas Appliances Directive
  – 2006/42/EC Machinery Directive

ONE STAGE in gas and in oil

VGL2.120	VENT	35 ... 120 kW	**p. 114**
VGL2.210	VENT	100 ... 190 kW	**p. 114**

0 100 200 300 400 500 kW

TWO STAGES in gas and in oil

VGL3.290 D	VENT	95 ... 290 kW	**p. 116**
VGL3.360 D	VENT	120 ... 360 kW	**p. 116**

0 100 200 300 400 500 kW

TWO STAGE PROGRESSIVE/MODULATING PNEUMATIC in gas / TWO STAGES in oil

VGL4.460 DP	VENT	168 ... 460 kW	**p. 120**
VGL4.610 DP	VENT	190 ... 610 kW	**p. 120**

0 250 500 750 1000 kW

TWO STAGE PROGRESSIVE/MODULATING PNEUMATIC in gas / THREE STAGES in oil

VGL05.700 DP	VENT	200 ... 700 kW	**p. 124**
VGL05.1000 DP	VENT	240 ... 1000 kW	**p. 124**
VGL06.1600 DP	VENT	300 ... 1600 kW	**p. 126**
VGL06.2100 DP	VENT	480 ... 2050 kW	**p. 126**

0 500 1000 1500 2000 2500 kW

Light oil range

Main features

- Fuel: light oil (viscosity 6 mm²/s at 20°C, H_u = 11,86 kWh/kg).
- Cubic type architecture allowing optimal accessibility, maximum compactness, minimum weight.
- Complete electrical equipment in the body of the burner with MDE2 System and display: this ensures that information is easier to read than ever before, constantly giving real-time information to professional operators, during the commissioning, the operation and at each operation cycle.
- Quiet ventilation and reduced electrical consumption.
- Closing of the air flap at burner shut-down.
- Maintenance operation are simplified: the combustion parts can be quickly removed, easily cleaned and, even when they are disassembled, they easily get back to their position after all the servicing work.
- All products are in compliance with EN267 European standards and with the following directives:
  - 2014/35/UE Low Voltage Directive
  - 2014/30/UE EMC Directive
  - 2006/42/EC Machinery Directive

ONE STAGE Low NOx Blue Flame

VB1.20	VENT	11 ... 20 kW	**p. 128**
VB1.24	VENT	14 ... 24 kW	**p. 128**
VB1.28	VENT	20 ... 28 kW	**p. 128**
VB1.30	VENT	22 ... 30 kW	**p. 128**
VB1.35	VENT	25 ... 35 kW	**p. 128**

0 10 20 30 40 50 kW

ONE STAGE Low NOx Yellow Flame

VE1.34	VENT	16 ... 34 kW	**p. 130**
VE1.50	VENT	28 ... 50 kW	**p. 130**
VE1.75	VENT	44 ... 75 kW	**p. 130**

0 20 40 60 80 100 kW

ONE STAGE with pre-heater

VL1.40 P	VENT	18 … 40 kW	**p. 132**
VL1.55 P	VENT	30 … 55 kW	**p. 132**

0 20 40 60 80 100 kW

ONE STAGE

VL1.42	VENT	20 … 42 kW	**p. 132**
VL1.55	VENT	30 … 55 kW	**p. 132**
VL1.95	VENT	45 … 95 kW	**p. 132**
VL2.140	VENT	80 … 140 kW	**p. 134**
VL2.200	VENT	130 … 200 kW	**p. 134**

0 50 100 150 200 250 kW

TWO STAGES Low NOx Yellow Flame

VE2.100 D	VENT	50 ... 100 kW	**p. 136**
VE2.150 D	VENT	65 ... 150 kW	**p. 136**

0 50 100 150 200 250 kW

TWO STAGES PWM Low NOx Blue Flame

VB2.38 VD	VENT	22 ... 38 kW	**p. 138**
VB2.45 VD	VENT	25 ... 45 kW	**p. 138**
VB2.54 VD	VENT	32 ... 54 kW	**p. 138**
VB2.66 VD	VENT	40 ... 66 kW	**p. 138**
VB2.77 VD	VENT	45 ... 77 kW	**p. 140**
VB2.85 VD	VENT	48 ... 85 kW	**p. 140**
VB2.95 VD	VENT	52 ... 95 kW	**p. 140**

0 20 40 60 80 100 kW

TWO STAGES

VL2.120 D	VENT	60 ... 120 kW	**p. 142**
VL2.160 D	VENT	80 ... 160 kW	**p. 142**
VL2.210 D	VENT	100 ... 210 kW	**p. 142**
VL3.290 D	VENT	130 ... 290 kW	**p. 144**
VL3.360 D	VENT	170 ... 360 kW	**p. 144**
VL4.460 D	VENT	180 ... 460 kW	**p. 146**
VL4.610 D	VENT	195 ... 610 kW	**p. 146**
VL5.950 D	VENT	260 ... 950 kW	**p. 148**
VL5.1200 D	VENT	400 ... 1186 kW	**p. 148**

0 500 1000 1500 2000 2500 kW

THREE STAGES

VL4.460 DP	VENT	180 ... 460 kW	**p. 150**
VL4.610 DP	VENT	195 ... 610 kW	**p. 150**
VL5.950 DP	VENT	260 ... 950 kW	**p. 152**
VL5.1200 DP	VENT	400 ... 1186 kW	**p. 152**
VL6.1600 DP	VENT	320 ... 1600 kW	**p. 154**
VL6.2100 DP	VENT	400 ... 2080 kW	**p. 154**

0 500 1000 1500 2000 2500 kW

VG 1.40, VG 1.55, VG 1.85

14,5 … 85 kW
1 stage (Low NOx class 3)

- **Fuels:** natural gas (G20/G25, H_u = 8,83…10,35 kWh/m³);
  LPG (G31, H_u = 25,89 kWh/m³)
- **Emission class:** Low NOx class 3 (<80 mg/kWh) according to EN676
- **Protection level:** IP 21

TECHNICAL DATA

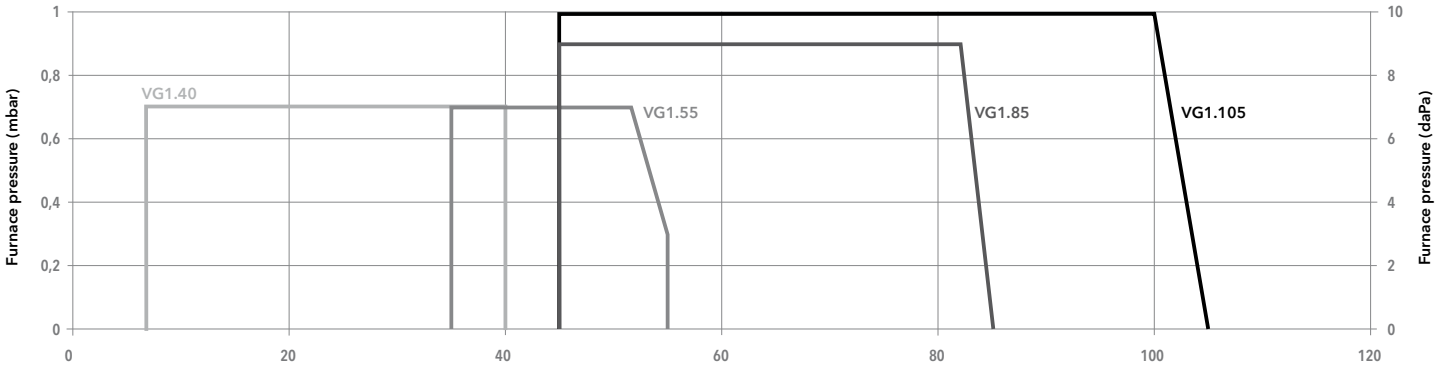

Test conditions conforming to EN676 - Temperature: 20°C - Pressure: 1013,5 mbar - Altitude: 0 m a.s.l.

Model			VG 1.40 /TC		VG 1.55 /TC		VG 1.85 /TC	
Operation range			14,5 - 40 kW		35 - 55 kW		45 - 85 kW	
Gas pressure			20 - 50 mbar		20 - 50 mbar		20 - 300 mbar	
Control box / flame detection			TCG1... / ionization		TCG1... / ionization		TCG1... / ionization	
Fan motor			230 V - 50 Hz - 85 W		230 V - 50 Hz - 85 W		230 V - 50 Hz - 85 W	
Electrical consumption			120 W		120 W		195 W	
Acoustic level (LpA)			55 dB(A)		55 dB(A)		60,5 dB(A)	
CE certificate			1312 AS 2386		1312 AS 2386		1312 BT 5252	
Head lenght			KN	KL	KN	KL	KN	KL
Complete burner code	VR4625	h3/8"-Rp1/2"/TC	**3832635**	-	**3832636**	-	-	-
	MB-DLE 407	d3/4"-Rp3/4"/TC	-	-	-	-	**3832637**	-

OTHER AVAILABLE VERSIONS

60 60 Hz version

V_{EXT} Versions for continuous ventilation and post-ventilation

SCOPE OF SUPPLY

The burner is delivered in its package complete with:
- 1 gas connection flange
- 1 compact gas train with gas filter; the gas filter is built-in for threaded valves (up to 2") and separated for flanged ones (DN65/80/100)
- 1 burner flange with insulation
- 1 bag containing installation fittings
- 1 bag containing technical documentation (instruction manual, technical data, electrical diagram, exploded view and spare parts list)

MDE2 RTC LOW NOx CLASS 3

DIMENSIONS (mm)

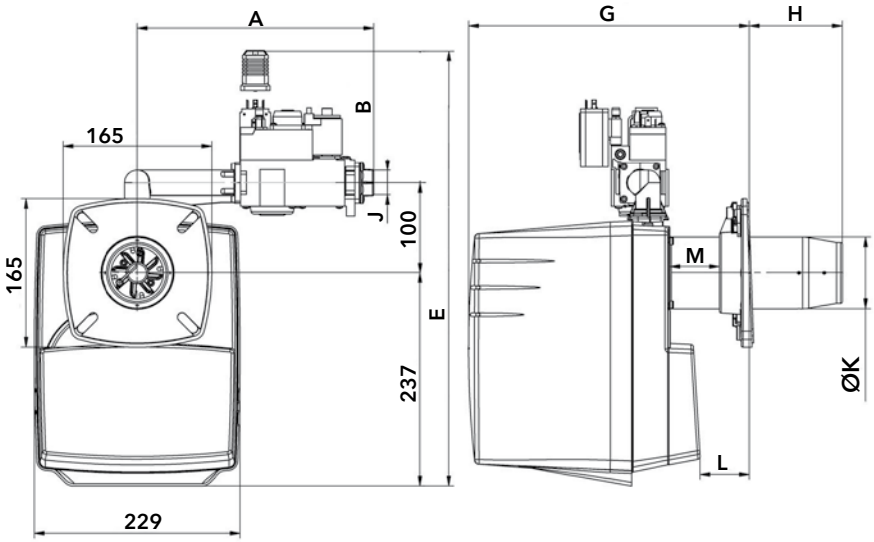

Gas train model	A	B	E	G		H		J	Ø K	L		M
				min	max	min	max			min	max	
VG 1.40/55	263	147	484	297	337	70	110	Rp1/2"	80	21	61	48
VG 1.85	282	140	477	300	355	70	138	Rp3/4"	90	15	83	52

Connecting flange

Model	Øa (mm)	b (mm)	c	d
VG 1.40/55	85-104	150-170	M8	45°
VG 1.85	95-104	150-170	M8	45°

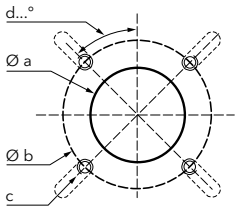

PACKAGING

The burner is delivered in 1 single package containing all components

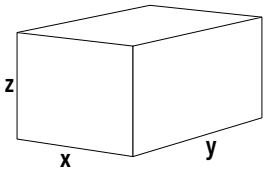

Burner	Dimensions (mm)			Gross weight (kg)
	X	Y	Z	
VG 1.40	300	260	640	11
VG 1.55	300	260	640	11
VG 1.85	300	260	640	11

VG 2.140, VG 2.200

80 ... 200 kW
1 stage (Low NOx class 3)

- **Fuels:** natural gas (G20/G25, H_u = 8,83…10,35 kWh/m³);
  LPG (G31, H_u = 25,89 kWh/m³)
- **Emission class:** Low NOx class 3 (<80 mg/kWh) according to EN676
- **Protection level:** IP 21

TECHNICAL DATA

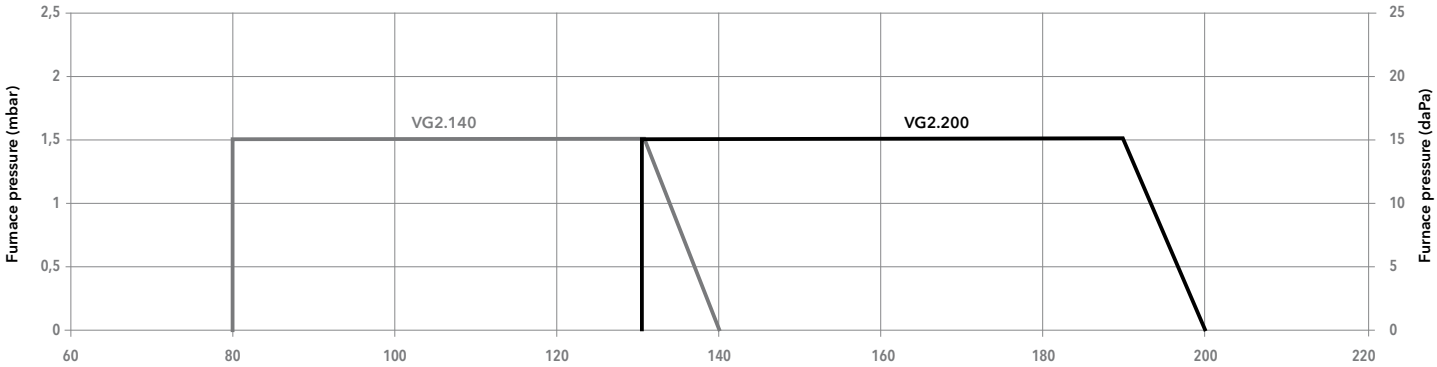

Test conditions conforming to EN676 - Temperature: 20°C - Pressure: 1013,5 mbar - Altitude: 0 m a.s.l.

Model			VG 2.140		VG 2.200	
Operation range			80 - 140 kW		130 - 200 kW	
Gas pressure			20 - 300 mbar		20 - 300 mbar	
Control box / flame detection			TCG1... / ionization		TCG1... / ionization	
Fan motor			230 V - 50 Hz - 100 W		230 V - 50 Hz - 130 W	
Electrical consumption			160 W		250 W	
Acoustic level (LpA)			62 dB(A)		65 dB(A)	
CE certificate			1312 CM 5594		1312 BQ 4069	
Head lenght			KN	KL	KN	KL
Complete burner code	MB-DLE 412	d1"1/4-Rp1"1/4	-	-	**3833571**	**3833572**
	MB-DLE 407	d3/4"-Rp3/4"	**3833554**	**3833555**	**3833563**	**3833564**

OTHER AVAILABLE VERSIONS

60 60 Hz version

V_{EMT} Versions for continuous ventilation and post-ventilation

SCOPE OF SUPPLY

The burner is delivered in its package complete with:
- 1 gas connection flange
- 1 compact gas train with gas filter; the gas filter is built-in for threaded valves (up to 2") and separated for flanged ones (DN65/80/100)
- 1 burner flange with insulation
- 1 bag containing installation fittings
- 1 bag containing technical documentation (instruction manual, technical data, electrical diagram, exploded view and spare parts list)

RTC LOW NOx CLASS 3

DIMENSIONS (mm)

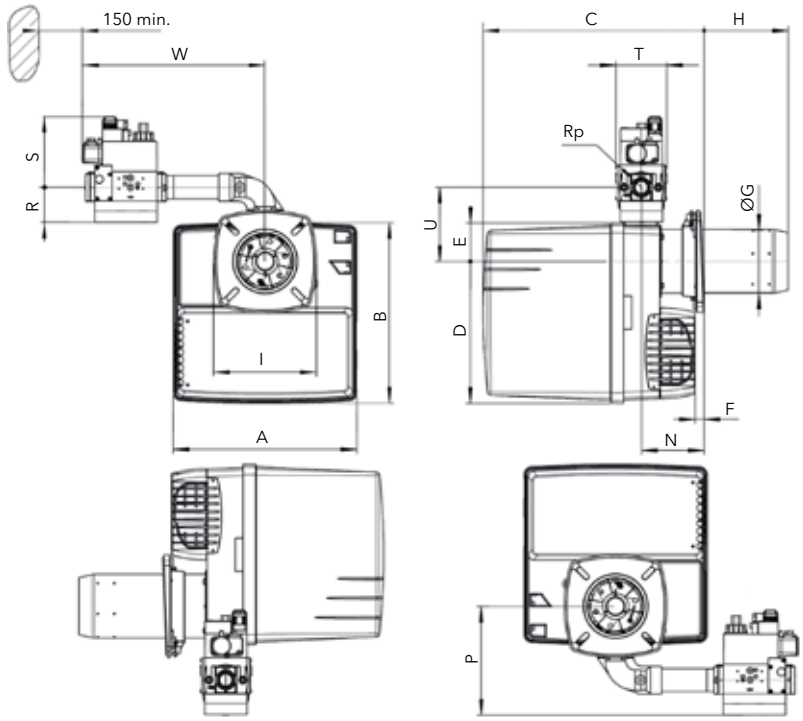

Model	Gas train	A	B	C		D	E	F min	ØG	H		I	N min	P	Rp	R	S	T	U	W
				KN	KL					KN	KL									
VG2.140	**d3/4"-Rp3/4"**	331	325	398...518	398...638	256	69	15	100	30...150	30...270	185	113	115	3/4"	46	140	120	133	330
VG2.200	**d3/4"-Rp3/4"**	331	325	398...518	398...638	256	69	15	115	30...150	30...270	185	113	115	3/4"	46	140	120	133	330
VG2.200	**d1"1/4-Rp1"1/4**	331	325	398...518	398...638	256	69	15	115	30...150	30...270	185	113	124	1"1/4	55	160	145	133	360

Connecting flange

Øa (mm)	b (mm)	c	d
120-135	150-184	M8	45°

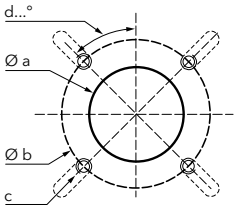

PACKAGING

The burner is delivered in 1 single package containing all components

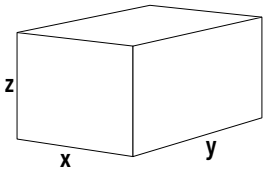

Burner	Dimensions (mm)			Gross weight (kg)
	X	Y	Z	
VG 2.140	400	400	760	21
VG 2.200	400	400	760	25

VG 01.85 D

45 … 85 kW
2 stages (Low NOx class 3)

- **Fuels:** natural gas (G20/G25, H_u = 8,83…10,35 kWh/m³);
  LPG (G31, H_u = 25,89 kWh/m³)
- **Emission class:** Low NOx class 3 (<80 mg/kWh) according to EN676
- **Protection level:** IP 21

TECHNICAL DATA

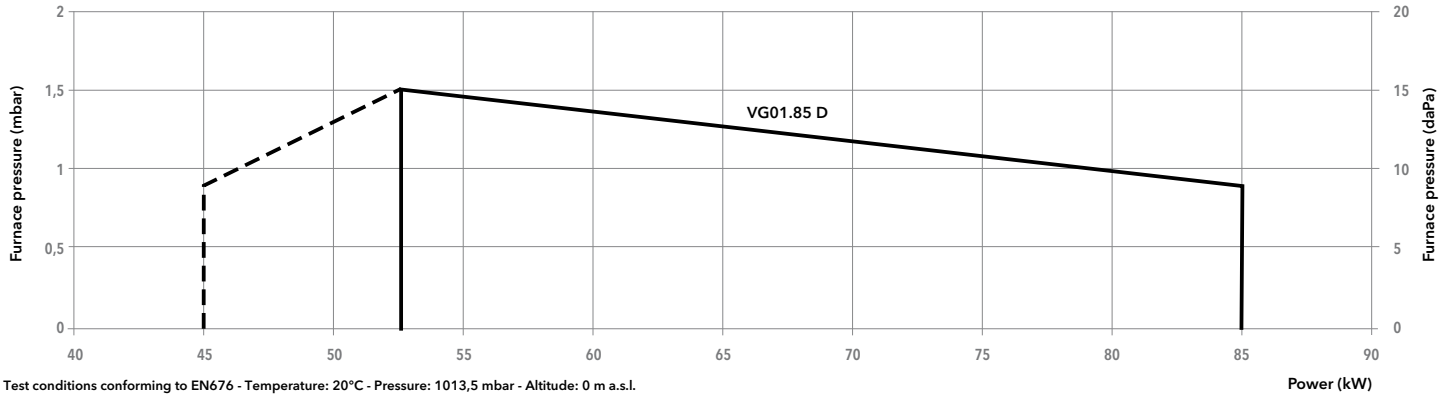

Test conditions conforming to EN676 - Temperature: 20°C - Pressure: 1013,5 mbar - Altitude: 0 m a.s.l.

Model		VG 01.85 D	
Operation range		(45) 52,5 - 85 kW	
Gas pressure		20 - 300 mbar	
Control box / flame detection		SG 513 / ionization	
Fan motor		230 V - 50 Hz - 85 W	
Electrical consumption		185 W	
Acoustic level (LpA)		60,5 dB(A)	
CE certificate		1312 BN 3794	
Head lenght		KN	KL
Complete burner code	MB-ZRDLE 407 d3/4"-Rp3/4"	**13017852**	-

OTHER AVAILABLE VERSIONS

60 60 Hz version

V_{EXT} Versions for continuous ventilation and post-ventilation

SCOPE OF SUPPLY

The burner is delivered in its package complete with:
- 1 gas connection flange
- 1 compact gas train with gas filter; the gas filter is built-in for threaded valves (up to 2") and separated for flanged ones (DN65/80/100)
- 1 burner flange with insulation
- 1 bag containing installation fittings
- 1 bag containing technical documentation (instruction manual, technical data, electrical diagram, exploded view and spare parts list)

RTC LOW NOx CLASS 3

DIMENSIONS (mm)

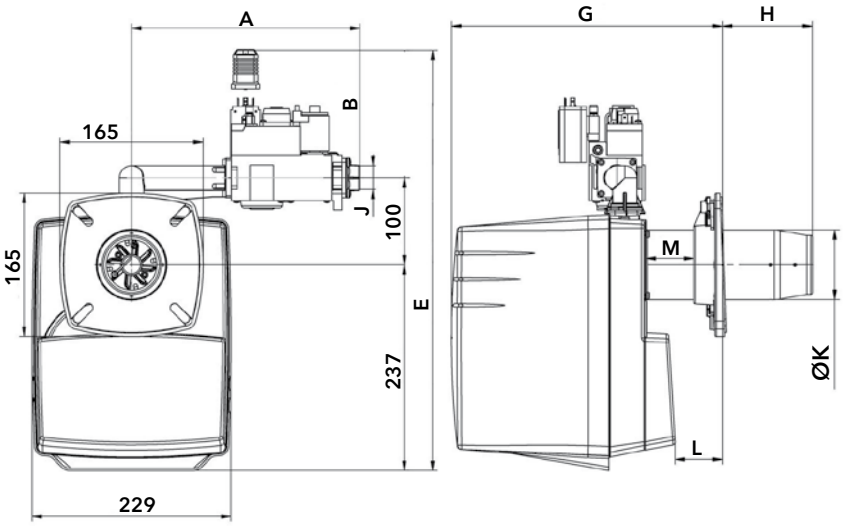

A	B	E	L		ØK	H		G		J
			min	max		min	max	min	max	
290	210	535	15	83	90	70	138	300	355	Rp3/4"

Connecting flange

Øa (mm)	b (mm)	c	d
95-104	150-170	M8	45°

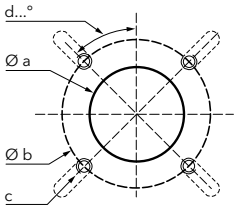

PACKAGING

The burner is delivered in 1 single package containing all components

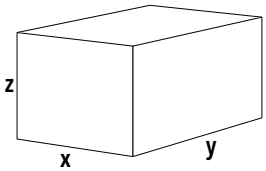

Dimensions (mm)			Gross weight (kg)
X	Y	Z	
300	260	640	14

VG 2.120 D, VG 2.160 D, VG 2.210 D

40 ... 210 kW
2 stages (Low NOx class 3)

- **Fuels:** natural gas (G20/G25, H_u = 8,83…10,35 kWh/m³);
  LPG (G31, H_u = 25,89 kWh/m³)
- **Emission class:** Low NOx class 3 (<80 mg/kWh) according to EN676
- **Protection level:** IP 21

TECHNICAL DATA

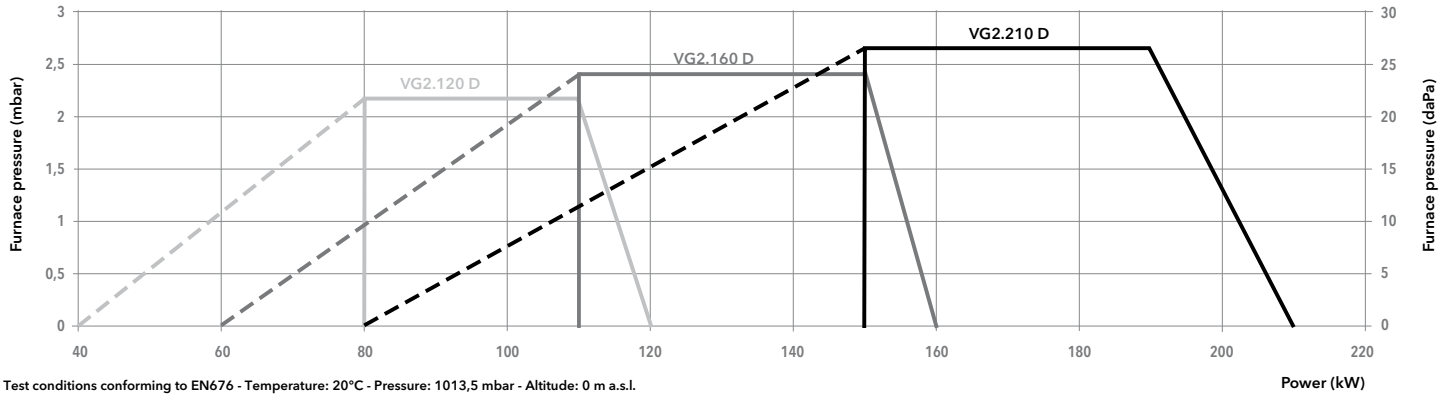

Test conditions conforming to EN676 - Temperature: 20°C - Pressure: 1013,5 mbar - Altitude: 0 m a.s.l.

Model	VG 2.120 D		VG 2.160 D		VG 2.210 D	
Operation range	(40) 80 - 120 kW		(60) 110 - 160 kW		(80) 150 - 210 kW	
Gas pressure	20 - 300 mbar		20 - 300 mbar		20 - 100 mbar for MB-ZRDLE 407; 100 - 300 mbar for MB-ZRDLE 412	
Control box / flame detection	TCG2... / ionization		TCG2... / ionization		TCG2... / ionization	
Fan motor	230 V - 50 Hz - 100 W		230 V - 50 Hz - 100 W		230 V - 50 Hz - 130 W	
Electrical consumption	185 W		280 W		290 W	
Acoustic level (LpA)	62 dB(A)		64 dB(A)		65,2 dB(A)	
CE certificate	1312 BQ 4069		1312 BQ 4069		1312 BQ 4069	
Head lenght	KN	KL	KN	KL	KN	KL
Complete burner code MB-ZRDLE 412 d1"1/4-Rp1"1/4	-	-	-	-	**3833332**	**3833323**
Complete burner code MB-ZRDLE 407 d3/4"-Rp3/4"	**3833330**	**3833321**	**3833331**	**3833322**	**3833333**	**3833334**

OTHER AVAILABLE VERSIONS

60 60 Hz version

V_{EXT} Versions for continuous ventilation and post-ventilation

SCOPE OF SUPPLY

The burner is delivered in its package complete with:
- 1 gas connection flange
- 1 compact gas train with gas filter; the gas filter is built-in for threaded valves (up to 2") and separated for flanged ones (DN65/80/100)
- 1 burner flange with insulation
- 1 bag containing installation fittings
- 1 bag containing technical documentation (instruction manual, technical data, electrical diagram, exploded view and spare parts list)

MDE2 RTC LOW NOx CLASS 3

DIMENSIONS (mm)

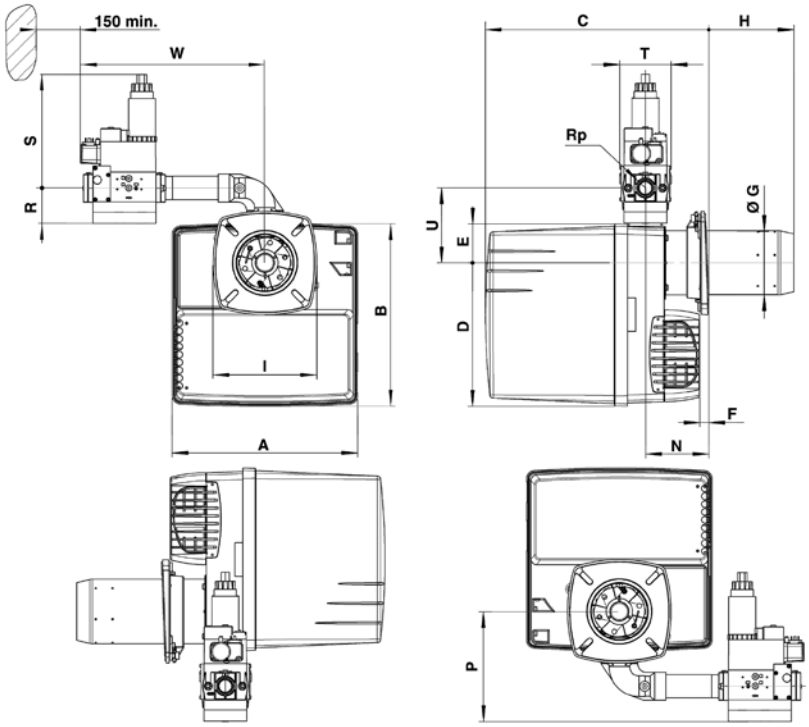

Gas train model	A	B	C		D	E	F min	ØG	H		I	N min	P	Rp	R	S	T	U	W
			KN	KL					KN	KL									
d1"1/4-Rp1"1/4	331	326	398…518	398…638	256	69	15	115	30…150	30…270	185	113	55	1"1/4	55	260	145	64	360
d3/4"-Rp3/4"	331	326	398…518	398…638	256	69	15	115	30…150	30…270	185	113	115	3/4"	46	210	120	64	330

Connecting flange

Øa (mm)	b (mm)	c	d
120-135	150-184	M8	45°

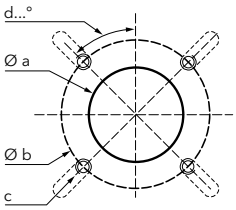

PACKAGING

The burner is delivered in 1 single package containing all components

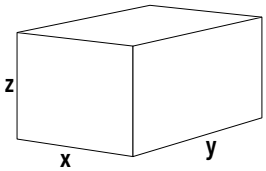

Burner	Dimensions (mm)			Gross weight (kg)
	X	Y	Z	
VG 2.120 D	400	400	760	26
VG 2.160 D	400	400	760	26
VG 2.210 D	400	400	760	26

VG 3.290 D, VG 3.360 D

95 ... 360 kW
2 stages (Low NOx class 3)

- **Fuels:** natural gas (G20/G25, H_u = 8,83…10,35 kWh/m³);
  LPG (G31, H_u = 25,89 kWh/m³)
- **Emission class:** Low NOx class 3 (<80 mg/kWh) according to EN676
- **Protection level:** IP 41

TECHNICAL DATA

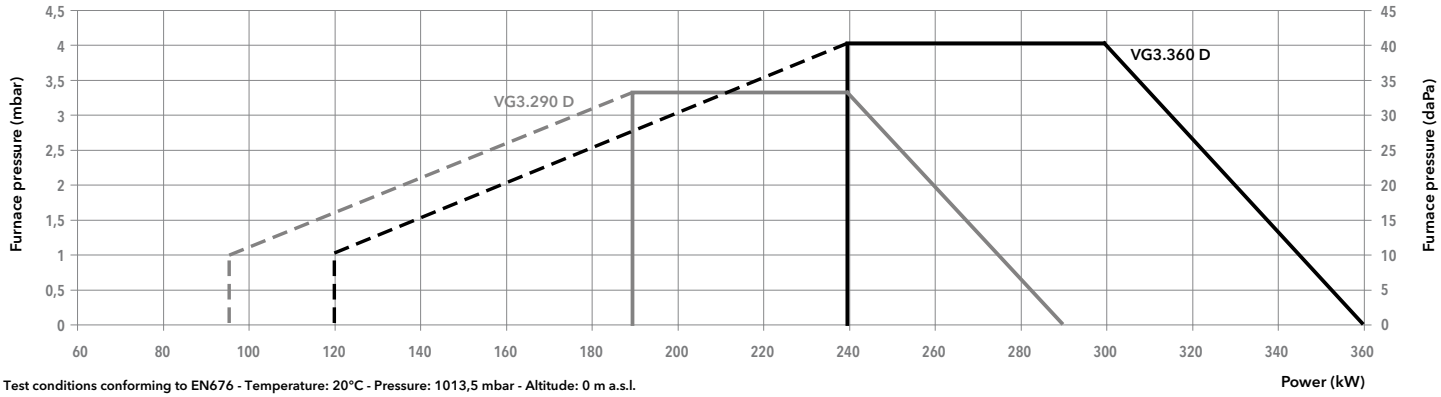

Test conditions conforming to EN676 - Temperature: 20°C - Pressure: 1013,5 mbar - Altitude: 0 m a.s.l.

Model		VG 3.290 D		VG 3.360 D	
Operation range		(95) 190 - 290 kW		(120) 240 - 360 kW	
Gas pressure		20 - 300 mbar		20 - 300 mbar	
Control box / flame detection		TCG2... / ionization		TCG2... / ionization	
Fan motor		230 V - 50 Hz - 250 W		230 V - 50 Hz - 300 W	
Electrical consumption		420 W		480 W	
Acoustic level (LpA)		67 dB(A)		69 dB(A)	
CE certificate		1312 BV 5208		1312 BV 5208	
Head lenght		KN	KL	KN	KL
Complete burner code	MB-ZRDLE 420 d1"1/2-Rp2"	-	-	**3833187**	**3833188**
	MB-ZRDLE 412 d1"1/4-Rp1"1/4	**3833056**	**3833057**	**3833052**	**3833053**
	MB-ZRDLE 407 d3/4"-Rp3/4"	**3833058**	**3833059**	**3833054**	**3833055**

OTHER AVAILABLE VERSIONS

60 60 Hz version
TC Version with tightness control
VENT Versions for continuous ventilation and post-ventilation

SCOPE OF SUPPLY

The burner is delivered in its package complete with:
- 1 burner head with flange seal and securing screws
- 1 compact gas train with gas filter; the gas filter is built-in for threaded valves (up to 2") and separated for flanged ones (DN65/80/100)
- 1 bag containing installation fittings
- 1 bag containing technical documentation (instruction manual, technical data, electrical diagram, exploded view and spare parts list)

MDE2 RTC LOW NOx CLASS 3

DIMENSIONS (mm)

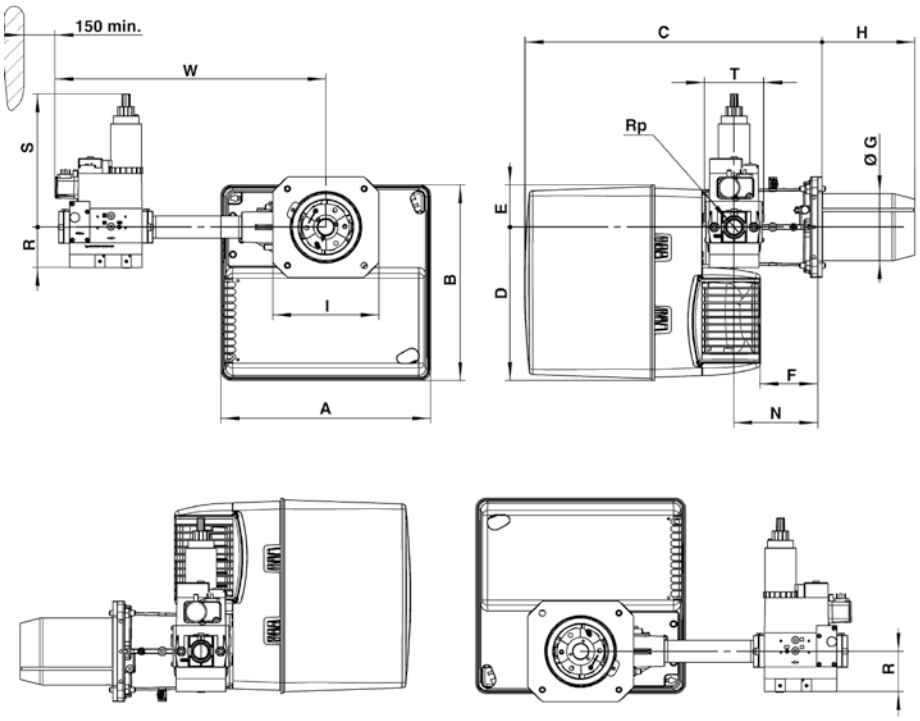

Gas train model	A	B	C	D	E	F	ØG	H		I	N	Rp	R	S	T	W
								KN	KL							
d1"1/2-Rp2"	406	379	576	297	82	120	130	180	320	195x205	170	2"	80	330	100	603
d1"1/4-Rp1"1/4	406	379	576	297	82	120	130	180	320	195x205	170	1"1/4	55	260	145	526
d3/4"-Rp3/4"	406	379	576	297	82	120	130	180	320	195x205	170	3/4"	46	210	120	479

Connecting flange

Øa (mm)	b (mm)	c	d
155-190	175-220	M10	45°

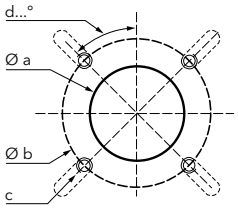

PACKAGING

The burner is delivered on a pallet in 3 packages containing:
- burner housing
- combustion head
- gas train and filter

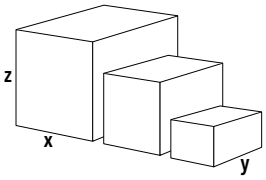

Component		Dimensions (mm)			Gross weight (kg)
		X	Y	Z	
Borner body	VG 3.290 D	440	400	520	21
	VG 3.360 D	440	400	520	22
Combustion head	KN	650	210	260	6
	KL	780	210	260	7
Gas train	d1"1/2-Rp2"	600	400	240	14
	d1"1/4-Rp1"1/4	440	320	240	10
	d3/4"-Rp3/4"	440	320	240	7

VG 3.290 D, VG 3.360 D

95 ... 360 kW
2 stages (Low NOx class 3)

PRESSURE LOSS [BURNER HEAD + GAS TRAIN] (mbar)

VG 3.290 D

Burner output (kW)	Natural gas G20 Hi = 10,35 kWh/m³		Natural gas G25 Hi = 8,83 kWh/m³		LPG G31 Hi = 25,89 kWh/m³
	d3/4"-Rp3/4"	d1"1/4-Rp1"1/4	d3/4"-Rp3/4"	d1"1/4-Rp1"1/4	d3/4"-Rp3/4"
190	17	9	23	9	9
210	21	10	29	10	11
230	25	13	34	13	13
250	30	15	41	15	16
270	34	17	47	17	18
290	40	20	55	20	21

Natural gas G20

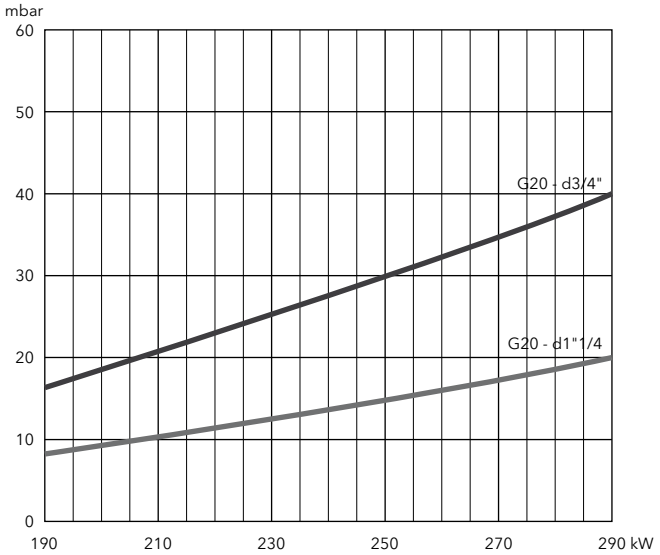

Natural gas G25

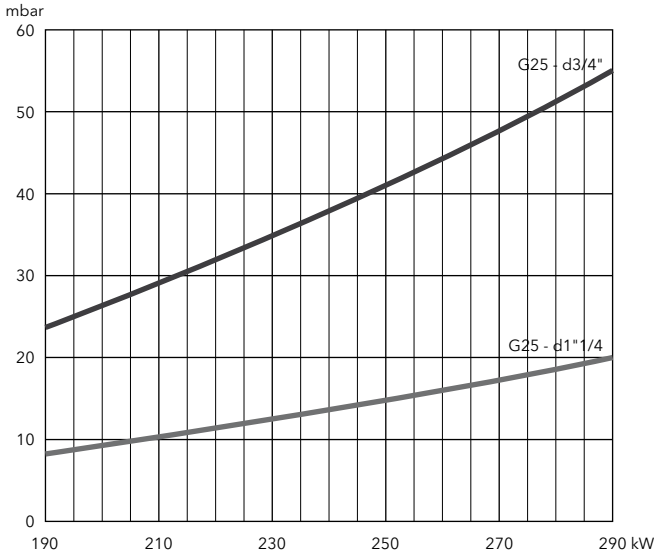

LPG

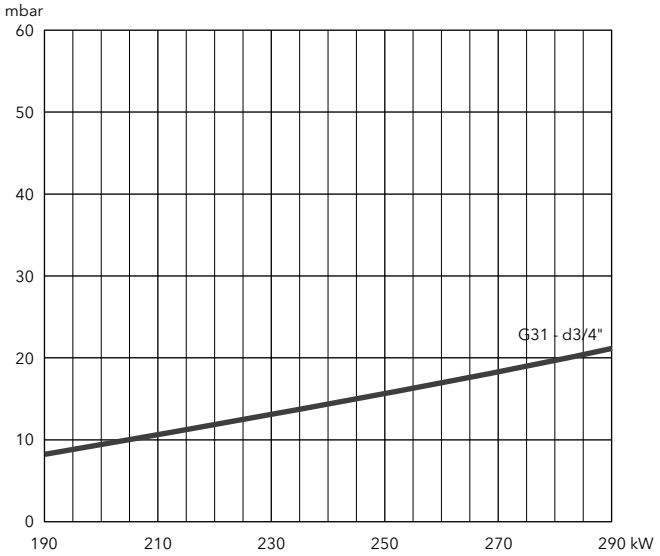

MDE2 RTC LOW NOx CLASS 3

PRESSURE LOSS [BURNER HEAD + GAS TRAIN] (mbar)

VG 3.360 D

Burner output (kW)	Natural gas G20 Hi = 10,35 kWh/m³		Natural gas G25 Hi = 8,83 kWh/m³			LPG G31 Hi = 25,89 kWh/m³
	d3/4"-Rp3/4"	d1"1/4-Rp1"1/4	d3/4"-Rp3/4"	d1"1/4-Rp1"1/4	d1"1/2-Rp2"	d3/4"-Rp3/4"
240	25	9	35	13	9	11
280	34	12	48	18	12	15
320	45	16	63	24	16	20
360	57	20	79	30	20	25

Natural gas G20

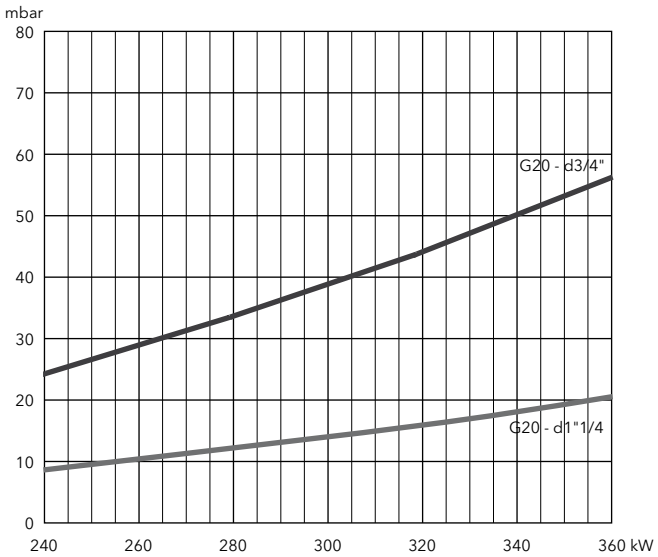

Natural gas G25

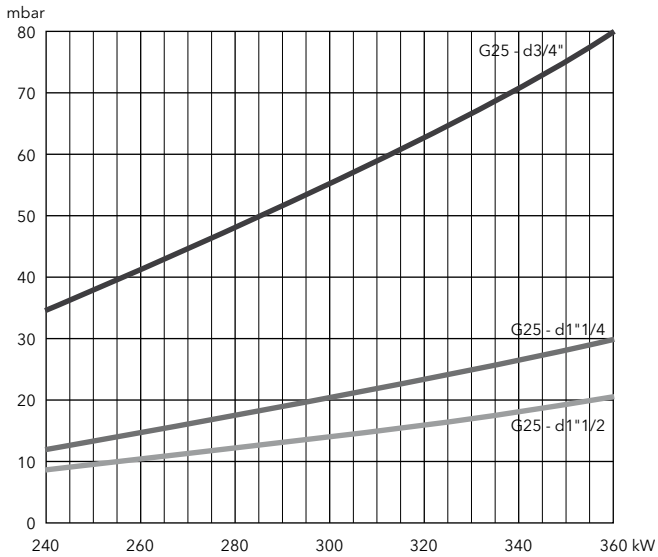

LPG

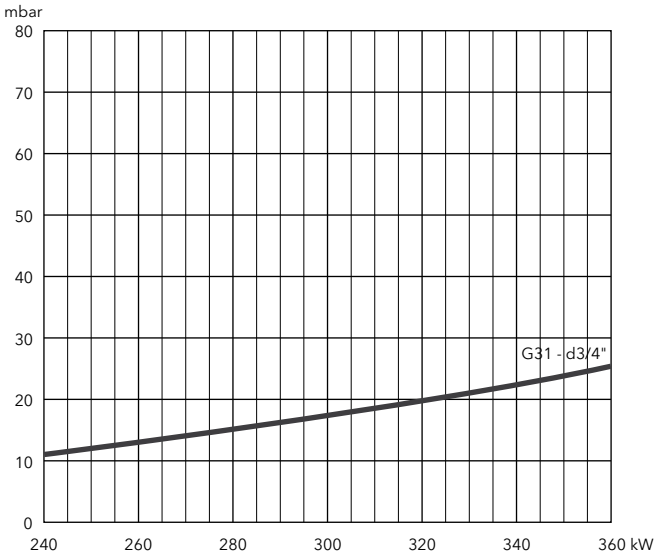

VG 4.460 D

150 ... 460 kW
2 stages (Low NOx class 3)

- **Fuels:** natural gas (G20/G25, H_u = 8,83…10,35 kWh/m³);
  LPG (G31, H_u = 25,89 kWh/m³)
- **Emission class:** Low NOx class 3 (<80 mg/kWh) according to EN676
- **Protection level:** IP 41

TECHNICAL DATA

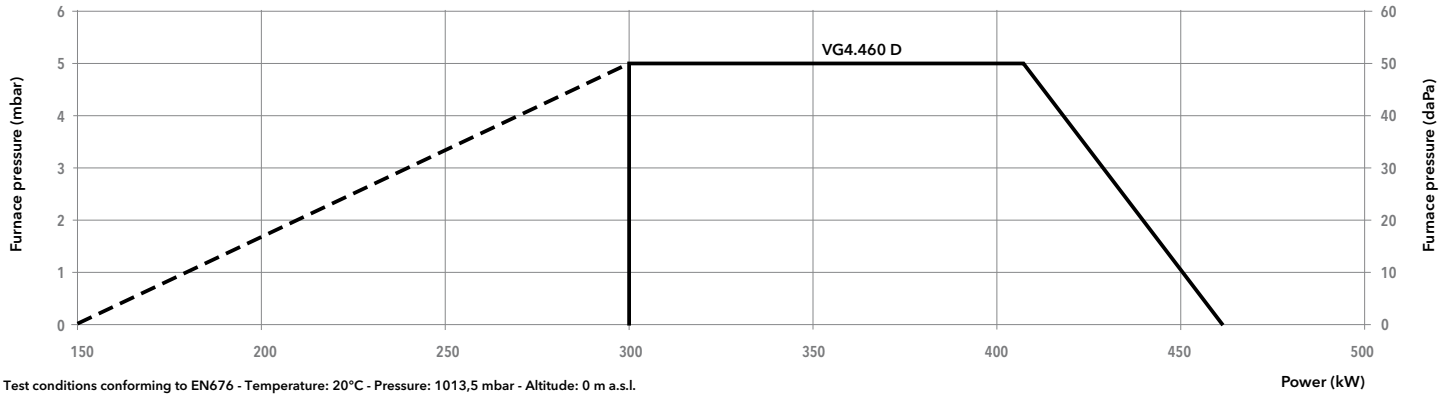

Test conditions conforming to EN676 - Temperature: 20°C - Pressure: 1013,5 mbar - Altitude: 0 m a.s.l.

Model		VG 4.460 D	
Operation range		(150) 300 - 460 kW	
Gas pressure		20 - 300 mbar	
Control box / flame detection		TCG2... / ionization	
Fan motor		230 V - 50 Hz - 420 W	
Electrical consumption		595 W	
Acoustic level (LpA)		70 dB(A)	
CE certificate		1312 CL 5412	
Head lenght		KN	KL
Complete burner code	MB-ZRDLE 420 d1"1/2-Rp2"	**3833399**	**3833400**
	MB-ZRDLE 412 d1"1/4-Rp1"1/4	**3833401**	**3833402**
	MB-ZRDLE 407 d3/4"-Rp3/4"	**3833403**	**3833404**

OTHER AVAILABLE VERSIONS

60 60 Hz version
TC Version with tightness control
VENT Versions for continuous ventilation and post-ventilation

SCOPE OF SUPPLY

The burner is delivered in its package complete with:
- 1 burner head with flange seal and securing screws
- 1 compact gas train with gas filter; the gas filter is built-in for threaded valves (up to 2") and separated for flanged ones (DN65/80/100)
- 1 bag containing installation fittings
- 1 bag containing technical documentation (instruction manual, technical data, electrical diagram, exploded view and spare parts list)

MDE2 RTC LOW NOx CLASS 3

DIMENSIONS (mm)

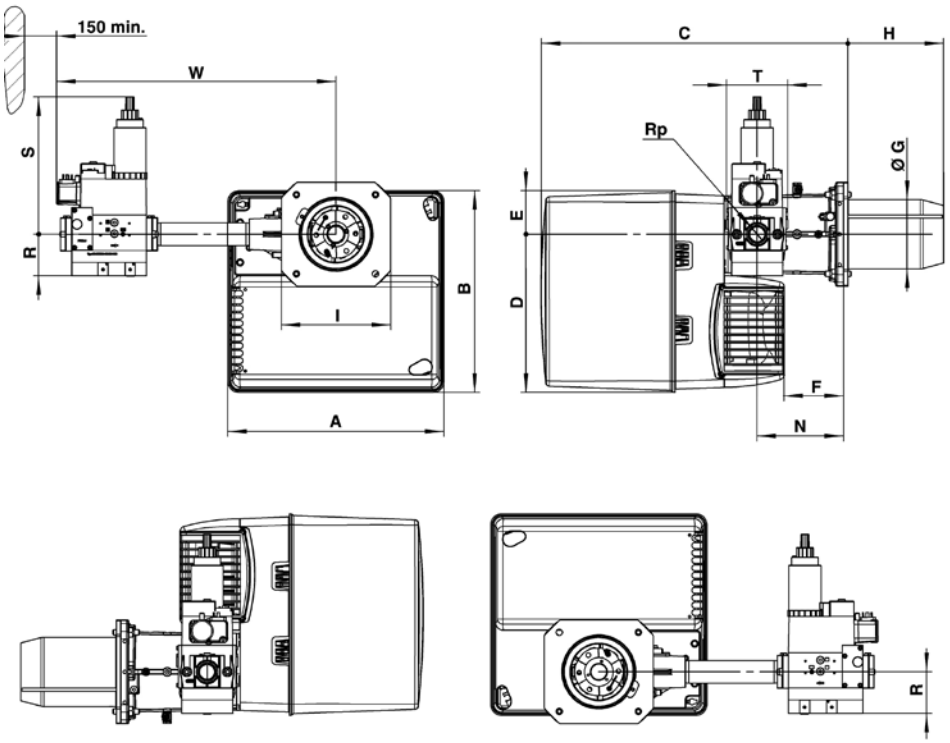

Gas train model	A	B	C	D	E	F	ØG	H		I	N	Rp	R	S	T	W
								KN	KL							
d1"1/2-Rp2"	465	475	640	377	97	149	150	220	360	245	195	2"	80	330	100	613
d1"1/4-Rp1"1/4	465	475	640	377	97	149	150	220	360	245	195	1"1/4	55	260	145	536
d3/4"-Rp3/4"	465	475	640	377	97	149	150	220	360	245	195	3/4"	46	210	120	489

Connecting flange

Øa (mm)	b (mm)	c	d
180-240	200-270	M10	45°

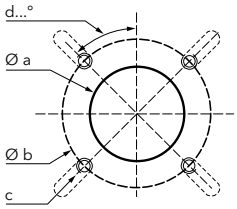

PACKAGING

The burner is delivered on a pallet in 3 packages containing:
- burner housing
- combustion head
- gas train and filter

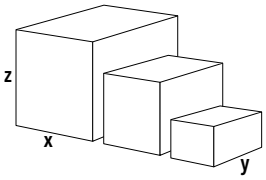

Component		Dimensions (mm)			Gross weight (kg)
		X	Y	Z	
Burner body	**VG 4.460 D**	490	490	590	28,7
Combustion head	**KN**	750	260	295	8,9
	KL	895	260	295	10,1
Gas train	**d1"1/2-Rp2"**	600	400	240	14
	d1"1/4-Rp1"1/4	440	320	240	10
	d3/4"-Rp3/4"	440	320	240	7

VG 4.460 D

150 ... 460 kW
2 stages (Low NOx class 3)

PRESSURE LOSS [BURNER HEAD + GAS TRAIN] (mbar)

VG 4.460 D

Burner output (kW)	Natural gas G20 Hi = 10,35 kWh/m³		Natural gas G25 Hi = 8,83 kWh/m³		
	d3/4"-Rp3/4"	d1"1/4-Rp1"1/4	d3/4"-Rp3/4"	d1"1/4-Rp1"1/4	d1"1/2-Rp2"
250	19	6	28	7	4
300	27	9	40	10	6
350	37	12	54	13	8
400	48	15	71	17	10
460	64	20	94	23	13

Natural gas G20

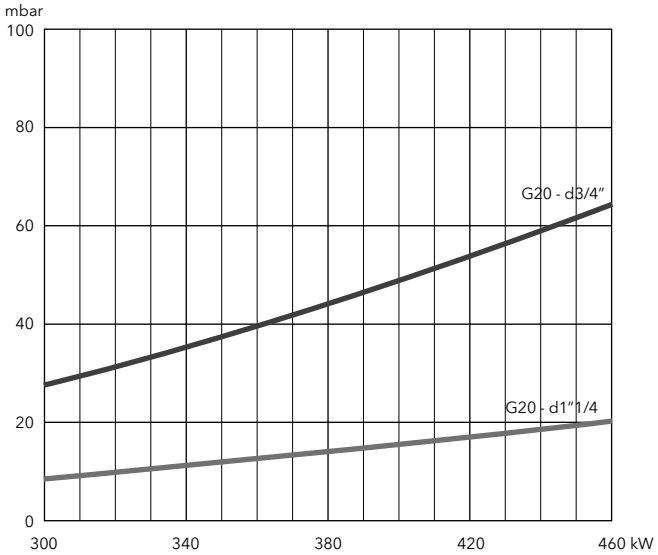

Natural gas G25

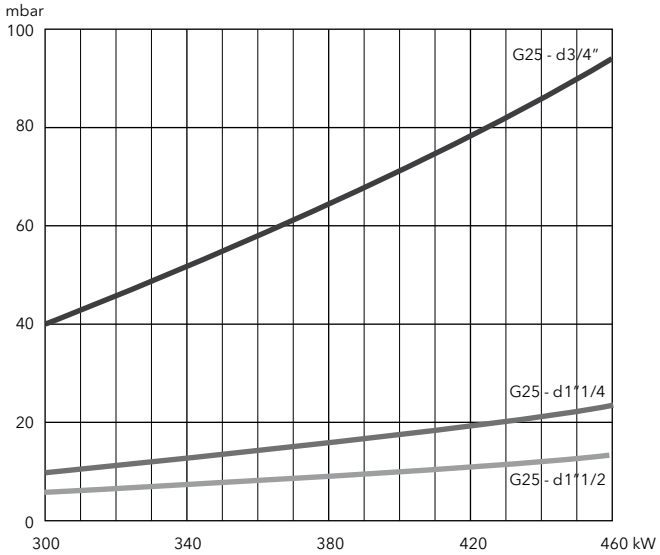

MDE2 RTC LOW NOx CLASS 3

PRESSURE LOSS [BURNER HEAD + GAS TRAIN] (mbar)

VG 4.460 D

Burner output (kW)	LPG G31 Hi = 25,89 kWh/m³	
	d3/4"-Rp3/4"	d1"1/4-Rp1"1/4
250	10	6
300	14	8
350	19	11
400	25	15
460	32	20

LPG

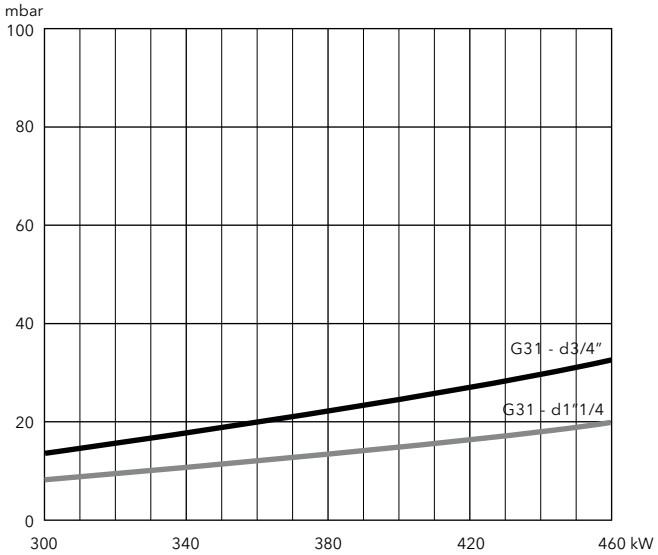

VG 2.120 DP, VG 2.160 DP, VG 2.210 DP

40 ... 210 kW
2 stage progressive/modulating pneumatic (Low NOx class 3)

- **Fuels:** natural gas (G20/G25, H_u = 8,83…10,35 kWh/m³);
  LPG (G31, H_u = 25,89 kWh/m³)
- **Emission class:** Low NOx class 3 (<80 mg/kWh) according to EN676
- **Operation:** two stage progressive or modulating with the installation of a power regulator and dedicated probes (see pag. 156)
- **Protection level:** IP 21

TECHNICAL DATA

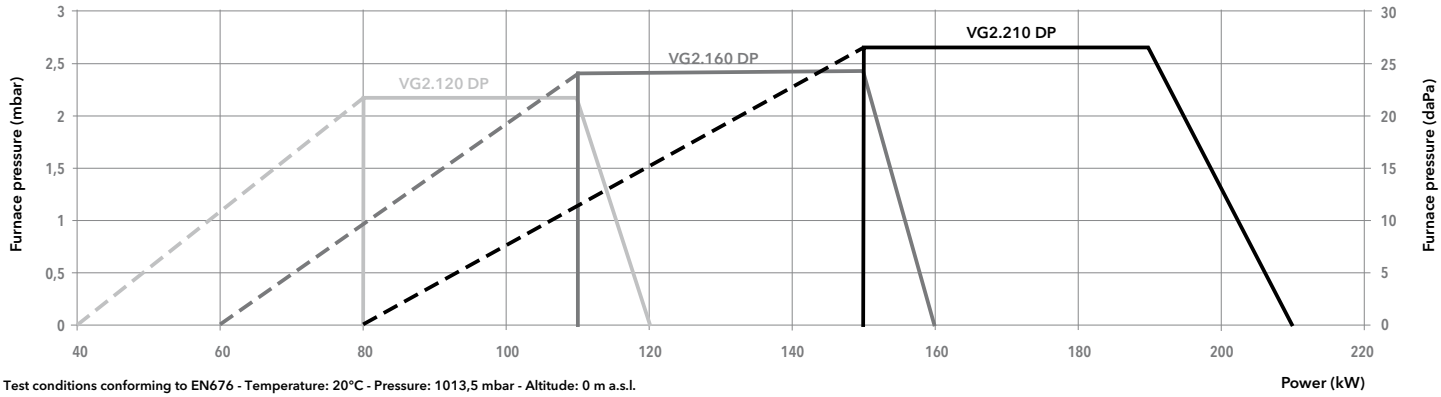

Test conditions conforming to EN676 - Temperature: 20°C - Pressure: 1013,5 mbar - Altitude: 0 m a.s.l.

Model		VG 2.120 DP		VG 2.160 DP		VG 2.210 DP	
Operation range		(40) 80 - 120 kW		(60) 110 - 160 kW		(80) 150 - 210 kW	
Gas pressure		20 - 100 mbar for d332 gas train; 20 - 300 mbar for d333 gas train		20 - 100 mbar for d345 gas train; 20 - 300 mbar for d347 gas train		20 - 40 mbar for d348 gas train; 40 - 100 for d346, 100 - 300 for d345	
Control box / flame detection		TCG5... / ionization		TCG5... / ionization		TCG5... / ionization	
Fan motor		230 V - 50 Hz - 100 W		230 V - 50 Hz - 100 W		230 V - 50 Hz - 130 W	
Electrical consumption		195 W		260 W		260 W	
Acoustic level (LpA)		62 dB(A)		64 dB(A)		65,2 dB(A)	
CE certificate		1312 BQ 4069		1312 BQ 4069		1312 BQ 4069	
Head lenght		KN	KL	KN	KL	KN	KL
Complete burner code	MB-VEF 407 d332-3/4"-Rp3/4"	**3833475**	**3833476**	-	-	-	-
	MB-VEF 407 d333-3/4"-Rp3/4"	**3833336**	**3833337**	-	-	-	-
	MB-VEF 407 d345-3/4"-Rp3/4"	-	-	**3833477**	**3833478**	**3833479**	**3833480**
	MB-VEF 407 d346-3/4"-Rp3/4"	-	-	-	-	**3833340**	**3833341**
	MB-VEF 407 d347-3/4"-Rp3/4"	-	-	**3833338**	**3833339**	-	-
	MB-VEF 412 d348-1"1/4-Rp1"1/4	-	-	-	-	**3833335**	**3833324**

OTHER AVAILABLE VERSIONS

60 60 Hz version

VENT Versions for continuous ventilation and post-ventilation

SCOPE OF SUPPLY

The burner is delivered in its package complete with:
- 1 gas connection flange
- 1 compact gas train with gas filter; the gas filter is built-in for threaded valves (up to 2") and separated for flanged ones (DN65/80/100)
- 1 burner flange with insulation
- 1 bag containing installation fittings
- 1 bag containing technical documentation (instruction manual, technical data, electrical diagram, exploded view and spare parts list)

AGP MDE2 RTC LOW NOx CLASS 3

DIMENSIONS (mm)

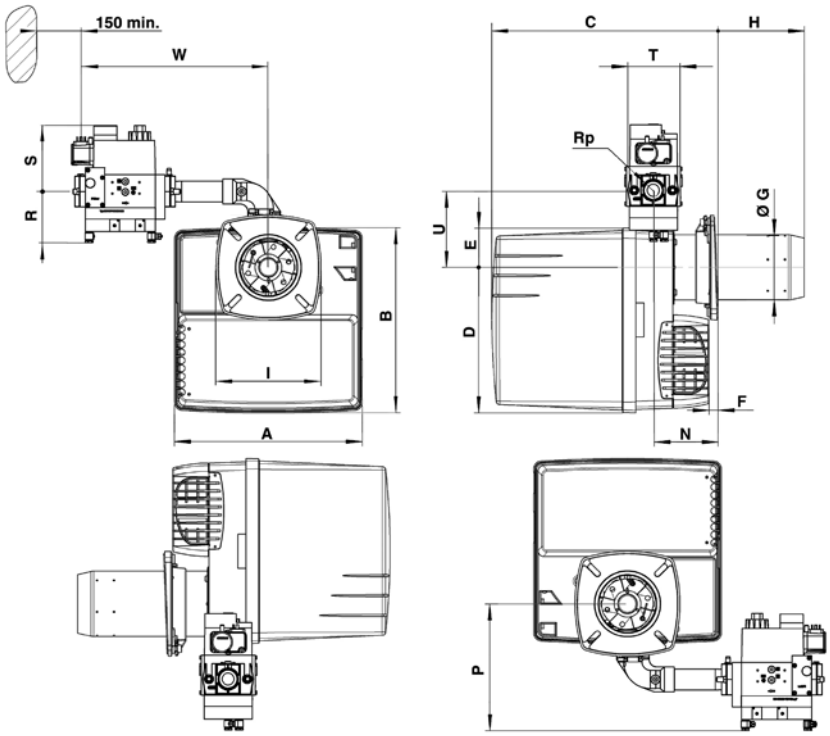

Gas train model	A	B	C		D	E	F min	ØG	H		I	N min	P	Rp	R	S	T	U	W
			KN	KL					KN	KL									
d1"1/4-Rp1"1/4	331	326	398...518	398...638	256	69	15	115	30...150	30...270	185	113	55	1"1/4	80	175	145	64	380
d3/4"-Rp3/4"	331	326	398...518	398...638	256	69	15	115	30...150	30...270	185	113	115	3/4"	70	160	120	64	345

Connecting flange

Øa (mm)	b (mm)	c	d
120-135	150-184	M8	45°

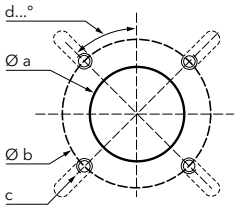

PACKAGING

The burner is delivered in 1 single package containing all components

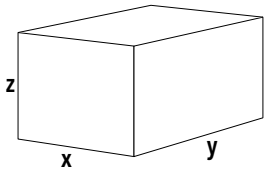

Burner	Dimensions (mm)			Gross weight (kg)
	X	Y	Z	
VG 2.120 DP	400	400	760	21
VG 2.160 DP	400	400	760	21
VG 2.210 DP	400	400	760	21

VG 3.290 DP, VG 3.360 DP

70 ... 360 kW
2 stages progressive/modulating pneumatic (Low NOx class 3)

- **Fuels:** natural gas (G20/G25, H_u = 8,83…10,35 kWh/m³);
  LPG (G31, H_u = 25,89 kWh/m³)
- **Emission class:** Low NOx class 3 (<80 mg/kWh) according to EN676
- **Operation:** two stage progressive or modulating with the installation of a power regulator and dedicated probes (see pag. 156)
- **Protection level:** IP 41

TECHNICAL DATA

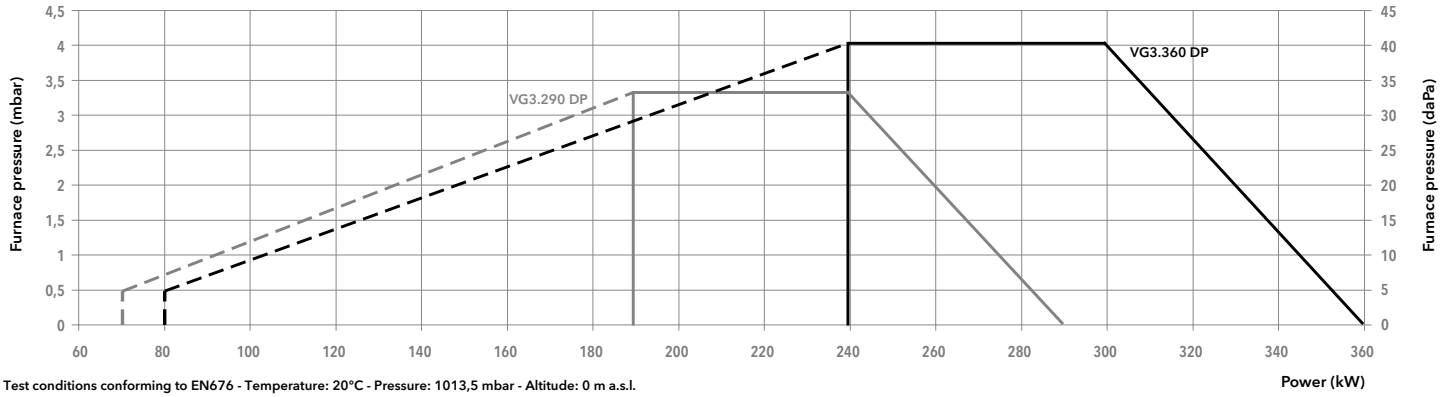

Test conditions conforming to EN676 - Temperature: 20°C - Pressure: 1013,5 mbar - Altitude: 0 m a.s.l.

		VG 3.290 DP		VG 3.360 DP	
Operation range		(70) 190 - 290 kW		(80) 240 - 360 kW	
Gas pressure		20 - 300 mbar		20 - 300 mbar	
Control box / flame detection		TCG5... / ionization		TCG5... / ionization	
Fan motor		230 V - 50 Hz - 250 W		230 V - 50 Hz - 300 W	
Electrical consumption		375 W		480 W	
Acoustic level (LpA)		67 dB(A)		69 dB(A)	
CE certificate		1312 BV 5208		1312 BV 5208	
Head lenght		KN	KL	KN	KL
Complete burner code	MB-VEF 420 d1"1/2-Rp2"	-	-	**3833189**	**3833190**
	MB-VEF 412 d1"1/4-Rp1"1/4	**3833064**	**3833065**	**3833060**	**3833061**
	MB-VEF 407 d3/4"-Rp1"	**3833066**	**3833067**	**3833062**	**3833063**

OTHER AVAILABLE VERSIONS

60 60 Hz version
TC Version with tightness control
VENT Versions for continuous ventilation and post-ventilation

SCOPE OF SUPPLY

The burner is delivered in its package complete with:
- 1 burner head with flange seal and securing screws
- 1 compact gas train with gas filter; the gas filter is built-in for threaded valves (up to 2") and separated for flanged ones (DN65/80/100)
- 1 bag containing installation fittings
- 1 bag containing technical documentation (instruction manual, technical data, electrical diagram, exploded view and spare parts list)

AGP MDE2 RTC LOW NOx CLASS 3

DIMENSIONS (mm)

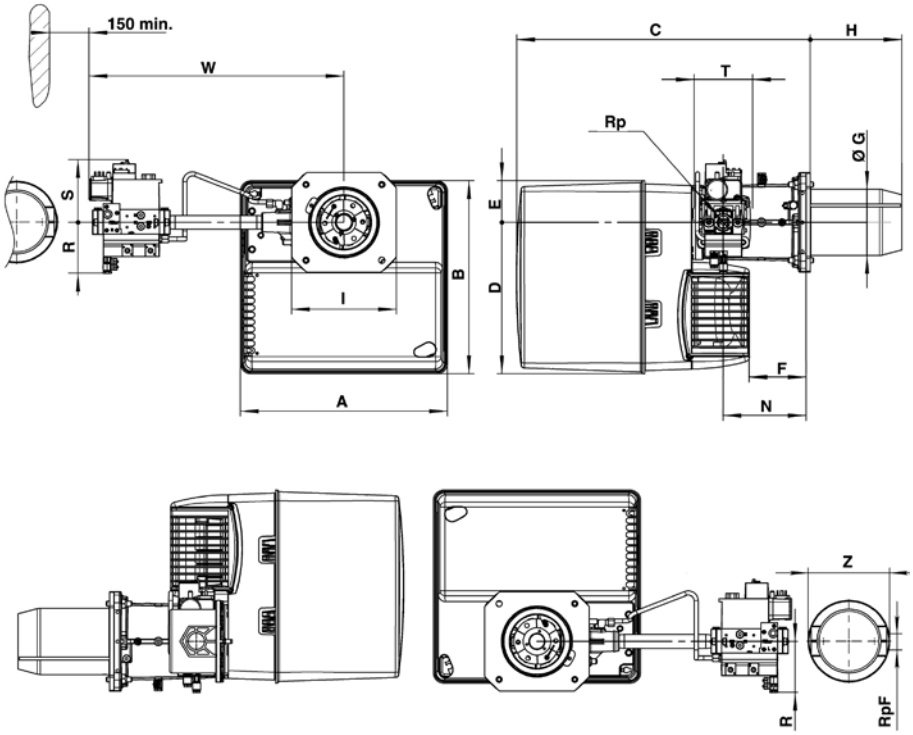

Gas train model	A	B	C	D	E	F	ØG	H		I	N	Rp	R	S	T	W	RpF	Z
								KN	KL									
d1"1/2-Rp2"	406	379	576	297	82	120	130	180	320	195x205	170	2"	100	185	100	603	-	-
d1"1/4-Rp1"1/4	406	379	576	297	82	120	130	180	320	195x205	170	1"1/4	80	175	145	526	-	-
d3/4"-Rp1"	406	379	576	297	82	120	130	180	320	195x205	170	1"	70	160	120	479	1"	160

Connecting flange

Øa (mm)	b (mm)	c	d
155-190	175-220	M10	45°

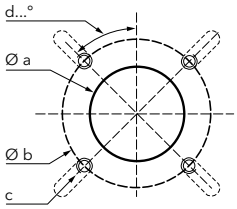

PACKAGING

The burner is delivered on a pallet in 3 packages containing:
- burner housing
- combustion head
- gas train and filter

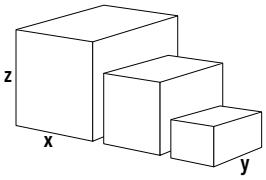

Component		Dimensions (mm)			Gross weight (kg)
		X	Y	Z	
Body	VG 3.290 DP	440	400	520	21
	VG 3.360 DP	440	400	520	22
Combustion head	KN	650	210	260	6
	KL	780	210	260	7
Gas train	d1"1/2-Rp2"	670	550	380	12
	d1"1/4-Rp1"1/4	600	400	240	11
	d3/4"-Rp1"	600	400	240	7

VG 3.290 DP, VG 3.360 DP

70 ... 360 kW
2 stages progressive/modulating pneumatic (Low NOx class 3)

PRESSURE LOSS [BURNER HEAD + GAS TRAIN] (mbar)

VG 3.290 DP

Burner output (kW)	Natural gas G20 Hi = 10,35 kWh/m³		Natural gas G25 Hi = 8,83 kWh/m³		LPG G31 Hi = 25,89 kWh/m³
	d3/4"-Rp1"	d1"1/4-Rp1"1/4	d3/4"-Rp1"	d1"1/4-Rp1"1/4	d3/4"-Rp1"
190	28	9	41	9	12
210	34	10	50	10	15
230	41	13	59	13	18
250	48	15	70	15	21
270	56	17	82	17	25
290	65	20	94	20	29

Natural gas G20

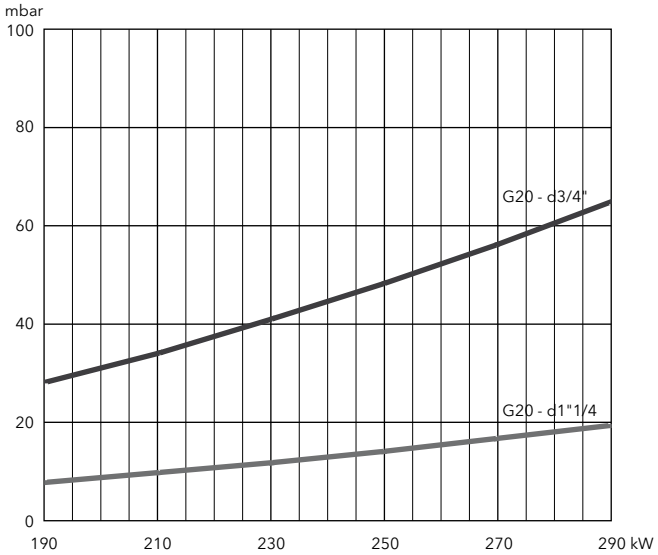

Natural gas G25

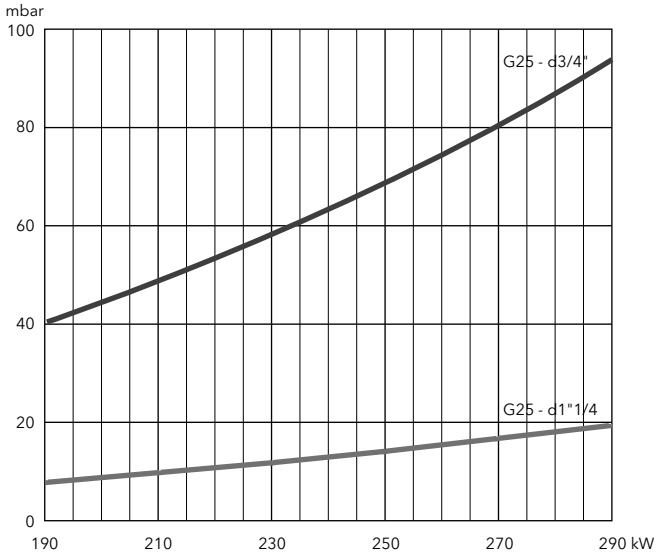

LPG

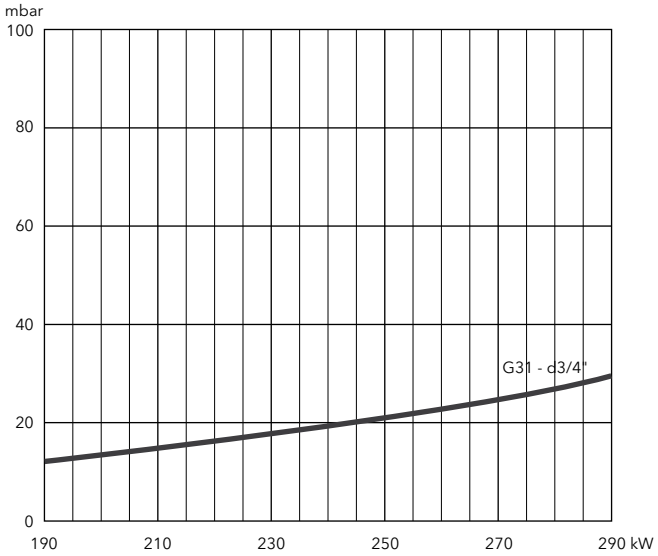

AGP MDE2 RTC LOW NOx CLASS 3

PRESSURE LOSS [BURNER HEAD + GAS TRAIN] (mbar)

VG 3.360 DP

Burner output (kW)	Natural gas G20 Hi = 10,35 kWh/m³		Natural gas G25 Hi = 8,83 kWh/m³			LPG G31 Hi = 25,89 kWh/m³
	d3/4"-Rp1"	d1"1/4-Rp1"1/4	d3/4"-Rp1"	d1"1/4-Rp1"1/4	d1"1/2-Rp2"	d3/4"-Rp1"
240	36	9	53	12	9	15
280	49	12	73	17	12	21
320	63	16	95	22	16	27
360	80	20	120	28	20	35

Natural gas G20

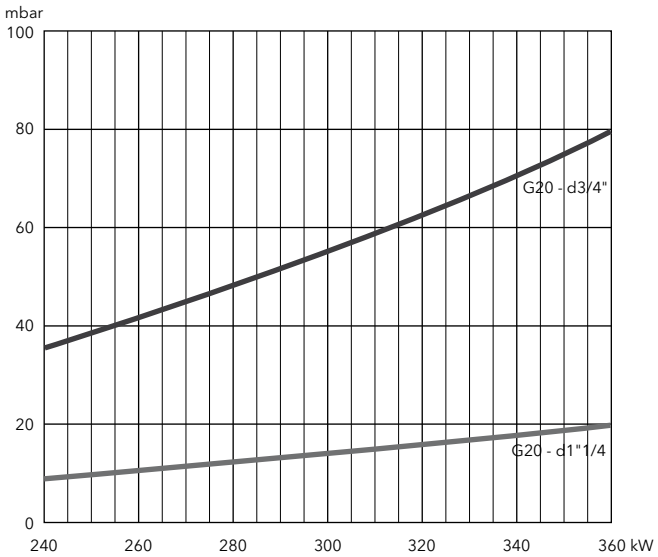

Natural gas G25

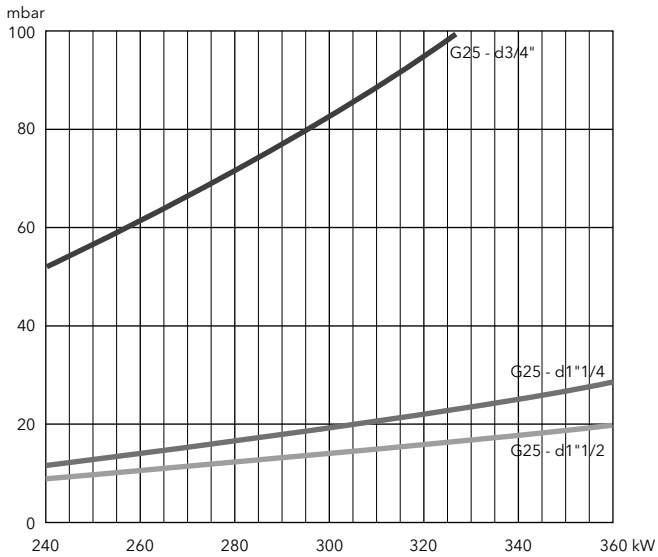

LPG

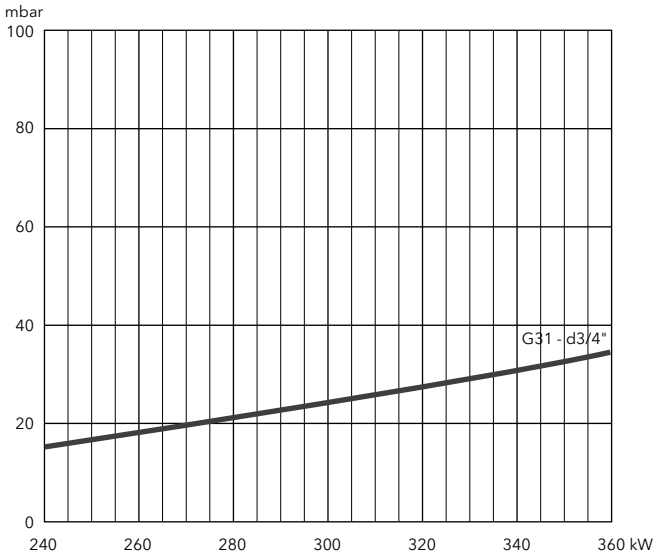

VG 4.460 DP, VG 4.610 DP

100 ... 610 kW
2 stage progressive/modulating pneumatic (Low NOx class 3)

- **Fuels:** natural gas (G20/G25, H_u = 8,83…10,35 kWh/m³);
  LPG (G31, H_u = 25,89 kWh/m³)
- **Emission class:** Low NOx class 3 (<80 mg/kWh) according to EN676
- **Operation:** two stage progressive or modulating with the installation of a power regulator and dedicated probes (see pag. 156)
- **Protection level:** IP 41

TECHNICAL DATA

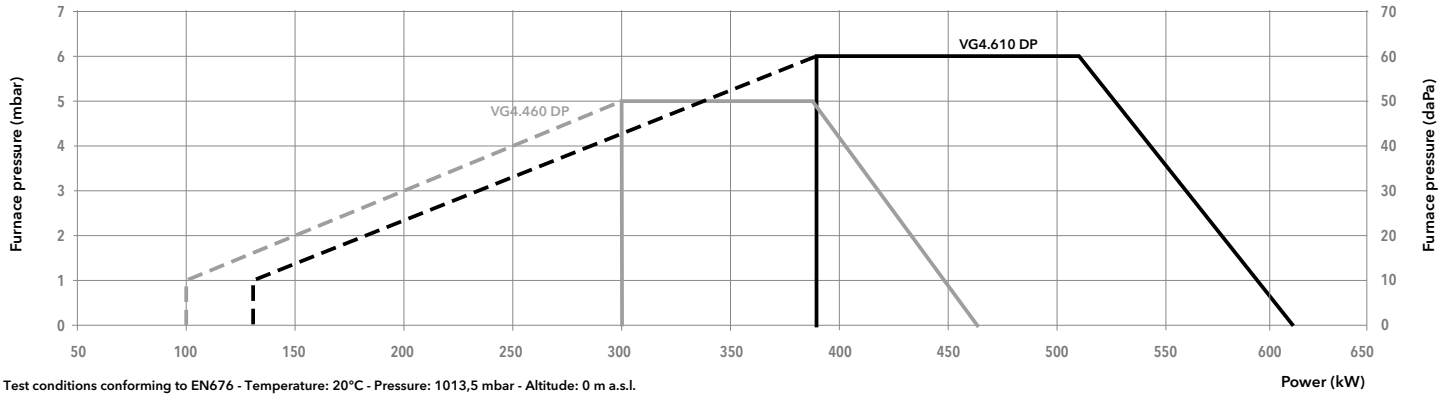

Test conditions conforming to EN676 - Temperature: 20°C - Pressure: 1013,5 mbar - Altitude: 0 m a.s.l.

Model		VG 4.460 DP		VG 4.610 DP	
Operation range		(100) 300 - 460 kW		(130) 390 - 610 kW	
Gas pressure		20 - 300 mbar		20 - 300 mbar	
Control box / flame detection		TCG5... / ionization		TCG5... / ionization	
Fan motor		230 V - 50 Hz - 420 W		230 V - 50 Hz - 750 W	
Electrical consumption		68 + 522 W		68 + 720 W	
Acoustic level (LpA)		70 dB(A)		71 dB(A)	
CE certificate		1312 CL 5412		1312 CL 5412	
Head lenght		KN	KL	KN	KL
Complete burner code	MB-VEF 420 d1"1/2-Rp2"	**3833423**	**3833424**	**3833415**	**3833416**
	MB-VEF 412 d1"1/4-Rp1"1/4	**3833411**	**3833412**	**3833417**	**3833418**
	MB-VEF 407 d3/4"-Rp1"	**3833413**	**3833414**	**3833419**	**3833420**

OTHER AVAILABLE VERSIONS

60 60 Hz version
TC Version with tightness control
VENT Versions for continuous ventilation and post-ventilation

SCOPE OF SUPPLY

The burner is delivered in its package complete with:
- 1 burner head with flange seal and securing screws
- 1 compact gas train with gas filter; the gas filter is built-in for threaded valves (up to 2") and separated for flanged ones (DN65/80/100)
- 1 bag containing installation fittings
- 1 bag containing technical documentation (instruction manual, technical data, electrical diagram, exploded view and spare parts list)

AGP MDE2 RTC LOW NOx CLASS 3

DIMENSIONS (mm)

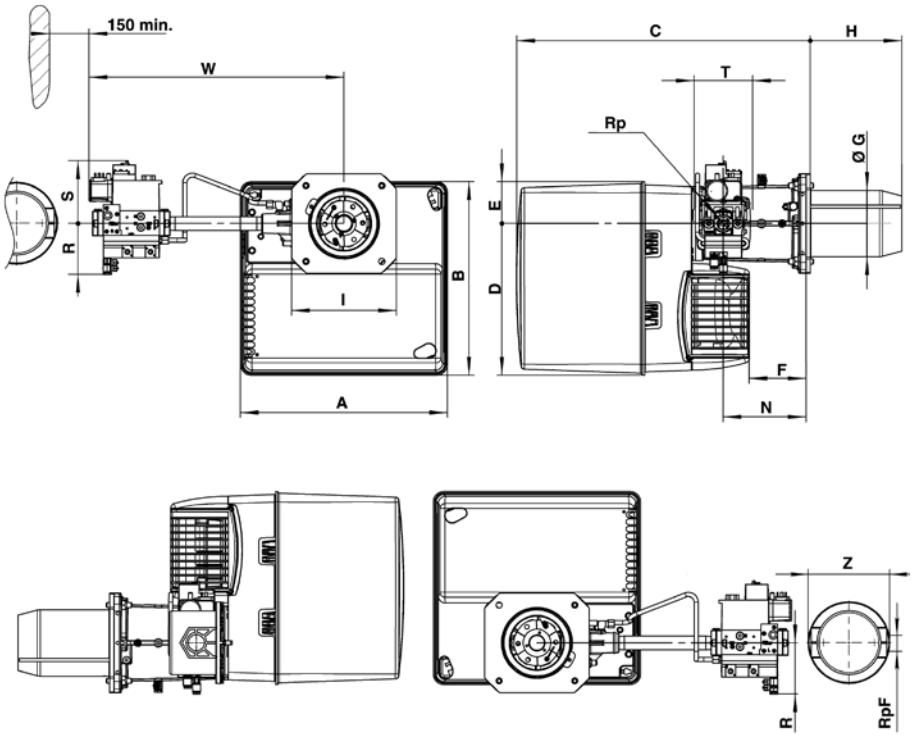

Gas train model	A	B	C	D	E	F	ØG	H		I	N	Rp	R	S	T	W	RpF	Z
								KN	KL									
d1"1/2-Rp2"	465	475	640	377	97	149	150	220	360	245	195	2"	100	185	100	613	-	-
d1"1/4-Rp1"1/4	465	475	640	377	97	149	150	220	360	245	195	1"1/4	80	175	145	536	-	-
d3/4"-Rp1"	465	475	640	377	97	149	150	220	360	245	195	1"	70	160	120	489	1"	160

Connecting flange

Øa (mm)	b (mm)	c	d
180-240	200-270	M10	45°

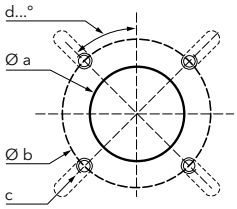

PACKAGING

The burner is delivered on a pallet in 3 packages containing:
- burner housing
- combustion head
- gas train and filter

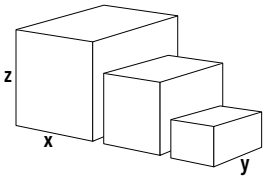

Component		Dimensions (mm)			Gross weight (kg)
		X	Y	Z	
Burner body	VG 4.460 DP	490	490	590	28,6
	VG 4.610 DP	490	490	590	32,7
Combustion head	KN	750	260	295	8,9
	KL	895	260	295	10,1
Gas train	d1"1/2-Rp2"	670	550	380	12
	d1"1/4-Rp1"1/4	600	400	240	11
	d3/4"-Rp1"	600	400	240	7

VG 4.460 DP, VG 4.610 DP

100 ... 610 kW
2 stage progressive/modulating pneumatic (Low NOx class 3)

PRESSURE LOSS [BURNER HEAD + GAS TRAIN] (mbar)

VG 4.460 DP

Burner output (kW)	Natural gas G20 Hi = 10,35 kWh/m³		Natural gas G25 Hi = 8,83 kWh/m³			LPG G31 Hi = 25,89 kWh/m³	
	d3/4"-Rp1"	d1"1/4-Rp1"1/4	d3/4"-Rp1"	d1"1/4-Rp1"1/4	d1"1/2-Rp2"	d3/4"-Rp1"	d1"1/4-Rp1"1/4
300	40	8	59	11	6	18	8
350	54	10	81	15	9	24	11
400	70	14	106	19	12	31	14
450	89	17	134	24	15	40	18
510	114	22	172	31	19	51	23

Natural gas G20

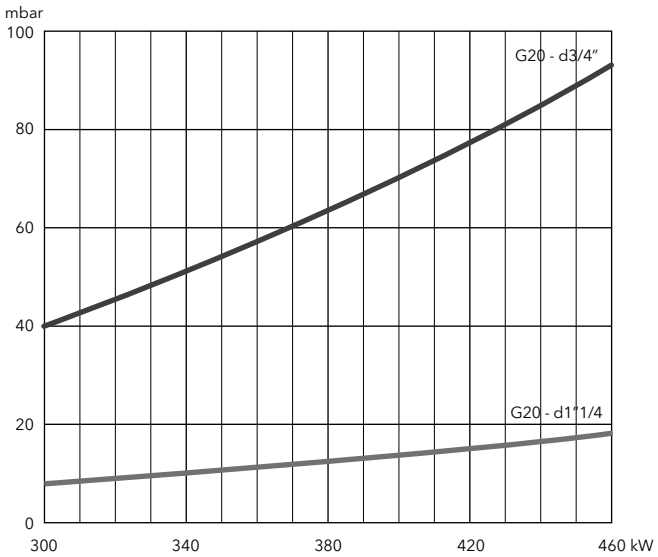

Natural gas G25

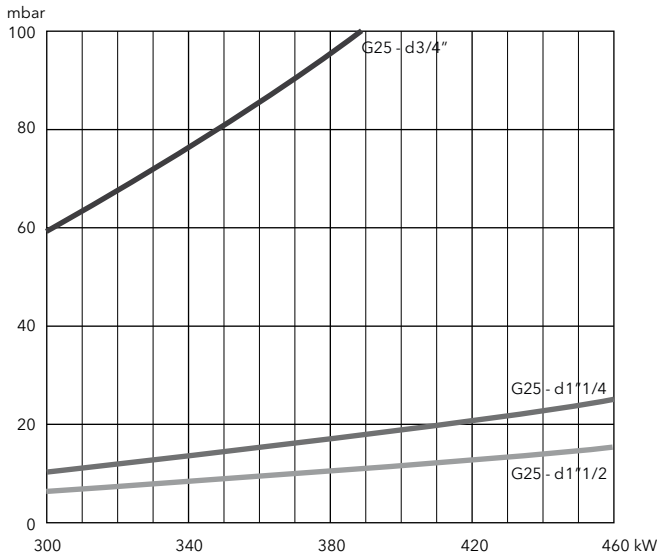

LPG

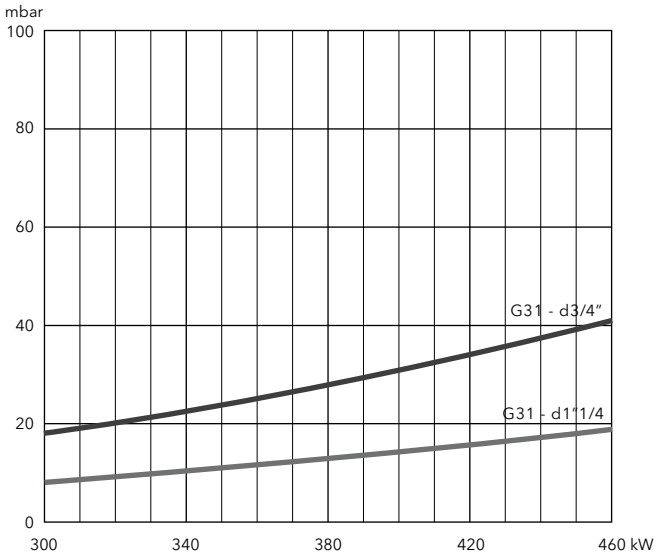

AGP MDE2 RTC LOW NOx CLASS 3

PRESSURE LOSS [BURNER HEAD + GAS TRAIN] (mbar)

VG 4.610 DP

Burner output (kW)	Natural gas G20 Hi = 10,35 kWh/m³			Natural gas G25 Hi = 8,83 kWh/m³			LPG G31 Hi= 25,89 kWh/m³	
	d3/4"-Rp1"	d1"1/4-Rp1"1/4	d1"1/2-Rp2"	d3/4"-Rp1"	d1"1/4-Rp1"1/4	d1"1/2-Rp2"	d3/4"-Rp1"	d1"1/4-Rp1"1/4
350	53	9	6	78	13	7	25	8
400	70	12	8	102	17	9	32	10
450	88	16	10	129	21	11	41	13
500	109	19	12	159	26	14	50	16
550	132	23	15	192	32	17	61	20
610	162	29	18	236	39	20	75	24

Natural gas G20

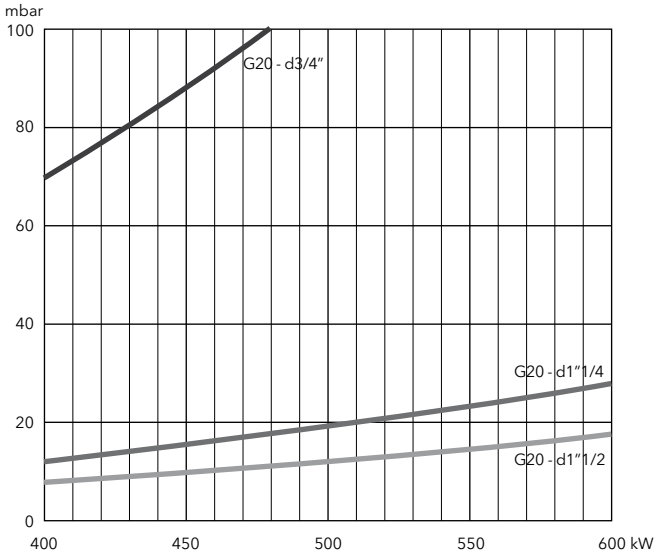

Natural gas G25

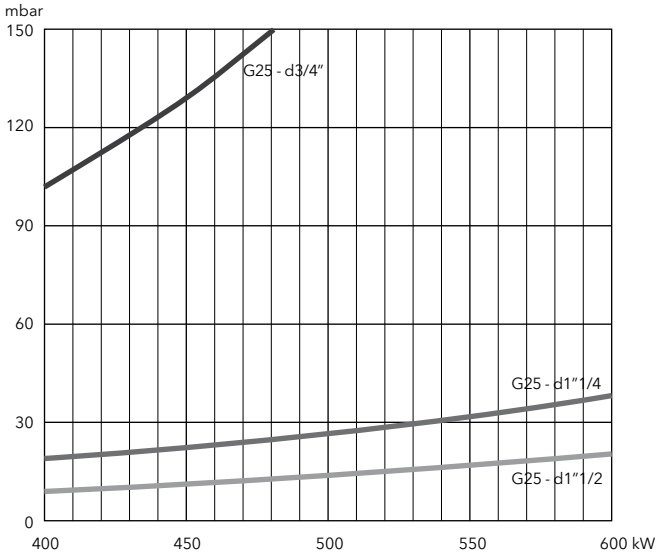

LPG

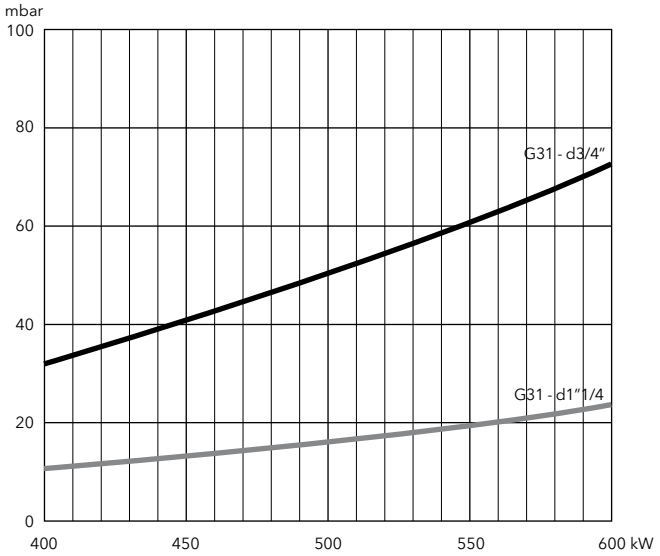

VG 5.950 DP, VG 5.1200 DP

170 ... 1160 kW
2 stage progressive/modulating pneumatic (Low NOx class 3)

- **Fuels:** natural gas (G20/G25, H_u = 8,83…10,35 kWh/m³);
  LPG (G31, H_u = 25,89 kWh/m³)
- **Emission class:** Low NOx class 3 (<80 mg/kWh) according to EN676
- **Operation:** two stage progressive or modulating with the installation of a power regulator and dedicated probes (see pag. 156)
- **Protection level:** IP 21

TECHNICAL DATA

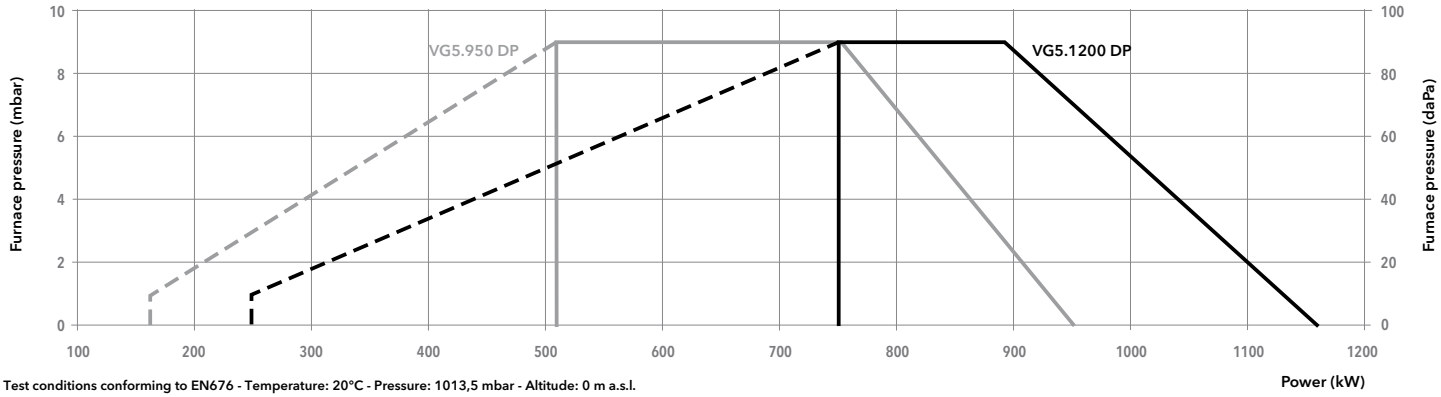

Test conditions conforming to EN676 - Temperature: 20°C - Pressure: 1013,5 mbar - Altitude: 0 m a.s.l.

Model			VG 5.950 DP			VG 5.1200 DP		
Operation range			(170) 510 - 950 kW			(250) 750 - 1160 kW		
Gas pressure			20 - 300 mbar			20 - 300 mbar		
Control box / flame detection			TCG 5.. / ionization			TCG 5.. / ionization		
Fan motor			230/400 V - 50 Hz - 1,5 kW			230/400 V - 50 Hz - 1,5 kW		
Electrical consumption			65 + 1884 W			67 + 2052 W		
Acoustic level (LpA)			77 dB(A)			77 dB(A)		
CE certificate			1312 CN 5684			1312 CN 5684		
Head lenght			KN	KL	KM	KN	KL	KM
Complete burner code	VGD 40-065	s65-DN65	-	-	-	**3833603**	**3833604**	**3833629**
	VGD 20-5011	s2"-Rp2"	**3833595**	**3833596**	**3833621**	**3833597**	**3833598**	**3833631**
	MB-VEF 420	d1"1/2-Rp2"	**3833585**	**3833586**	**3833623**	**3833589**	**3833590**	**3833633**
	MB-VEF 412	d1"1/4-Rp2"	**3833579**	**3833580**	**3833625**	**3833581**	**3833582**	**3833635**
	MB-VEF 407	d3/4"-Rp1"	**3833583**	**3833584**	**3833627**	-	-	-

OTHER AVAILABLE VERSIONS

60 60 Hz version
TC Version with tightness control
VENT Versions for continuous ventilation and post-ventilation

SCOPE OF SUPPLY

The burner is delivered in its package complete with:
- 1 burner head with flange seal and securing screws
- 1 compact gas train with gas filter; the gas filter is built-in for threaded valves (up to 2") and separated for flanged ones (DN65/80/100)
- 1 bag containing installation fittings
- 1 bag containing technical documentation (instruction manual, technical data, electrical diagram, exploded view and spare parts list)

AGP MDE2 RTC LOW NOx CLASS 3

DIMENSIONS (mm)

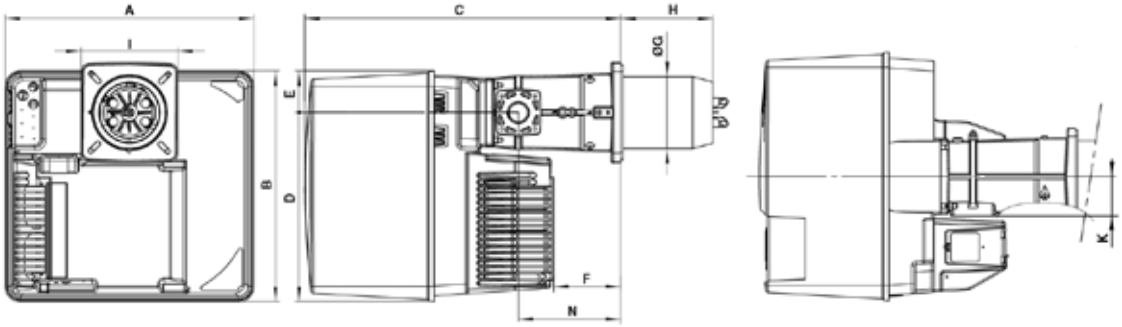

Connecting flange

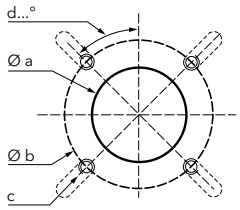

A	B	C	D	E	F	ØG	H			I	K	N
							KN	KM	KL			
581	549	752	450	99	164	170	215	325	435	230x238	89	244

Øa (mm)	b (mm)	c	d
195	220-260	M10	45°

Gas trains

Gas train "d":

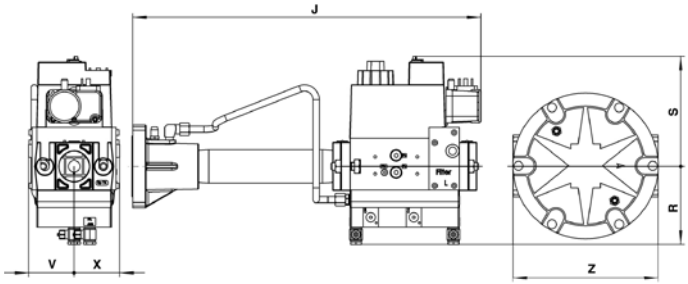

Model	J	R	S	V	X	Z
d1"1/2-Rp2"	540	123	190	55	55	-
d1"1/4-Rp2"	450	100	141	58	58	186
d3/4"-Rp1"	420	100	122	55	50	160

Gas train "s":

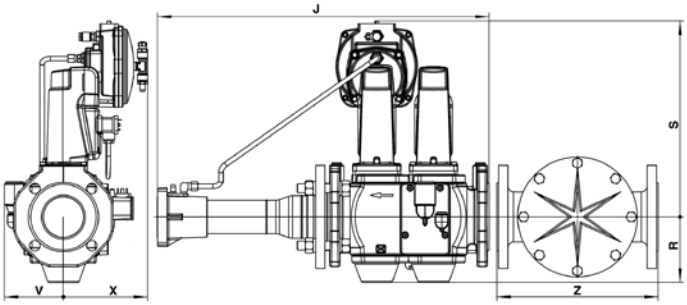

Model	J	R	S	V	X	Z
s65-DN65	600	135	360	110	150	290
s2"-Rp2"	612	103	330	110	150	186

PACKAGING

The burner is delivered on a pallet in 3 packages containing:
- burner housing
- combustion head
- gas train and filter

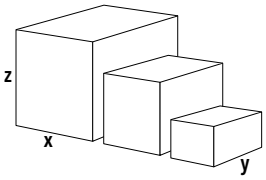

Component		Dimensions (mm)			Gross weight (kg)
		X	Y	Z	
Burner body	VG 5.950 DP	800	600	850	53,4
	VG 5.1200 DP	800	600	850	54,6
Combustion head	KN	780	265	280	12,3
	KL	1010	265	280	14,4
	KM	1010	265	280	13,4
Gas train	s65-DN65	790	600	500	29
	s2"-Rp2"	790	600	500	17,2
	d1"1/2-Rp2"	670	550	380	12
	d1"1/4-Rp2"	600	400	240	12
	d3/4"-Rp1"	600	400	240	7

VG 5.950 DP, VG 5.1200 DP

170 ... 1160 kW
2 stage progressive/modulating pneumatic (Low NOx class 3)

PRESSURE LOSS [BURNER HEAD + GAS TRAIN] (mbar)

VG 5.950 DP

Burner output (kW)	Natural gas G20 Hi = 10,35 kWh/m³				Natural gas G25 Hi = 8,83 kWh/m³				LPG G31 Hi= 25,89 kWh/m³			
	d3/4"-Rp1"	d1"1/4-Rp2"	d1"1/2-Rp2"	s2"-Rp2"	d3/4"-Rp1"	d1"1/4-Rp2"	d1"1/2-Rp2"	s2"-Rp2"	d3/4"-Rp1"	d1"1/4-Rp2"	d1"1/2-Rp2"	s2"-Rp2"
550	104	32	10	7	157	46	13	10	47	16	9	9
600	122	38	11	9	186	54	16	12	56	19	11	11
650	145	45	13	11	219	64	19	14	66	22	13	13
700	168	52	15	12	253	74	22	16	76	25	14	14
750	193	60	18	14	292	85	25	18	88	28	16	16
800	219	68	21	16	-	96	29	21	99	32	19	19
850	248	77	24	18	-	109	33	24	112	37	21	21
900	277	86	27	20	-	122	36	27	126	41	24	24
950	308	95	29	23	-	136	40	30	141	46	27	27

Natural gas G20

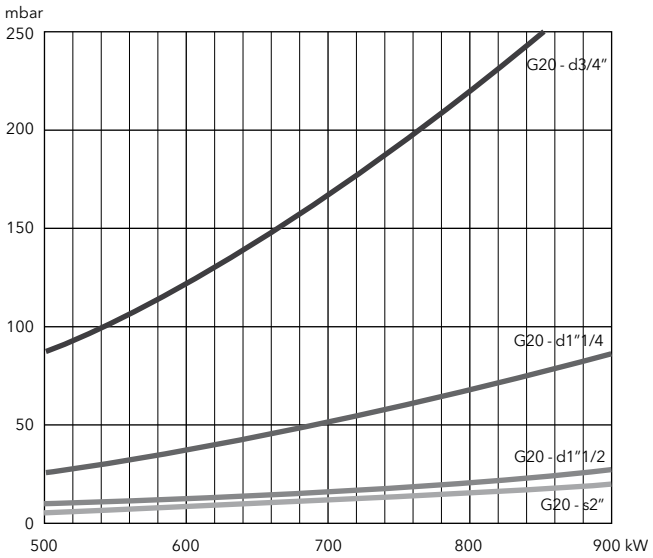

Natural gas G25

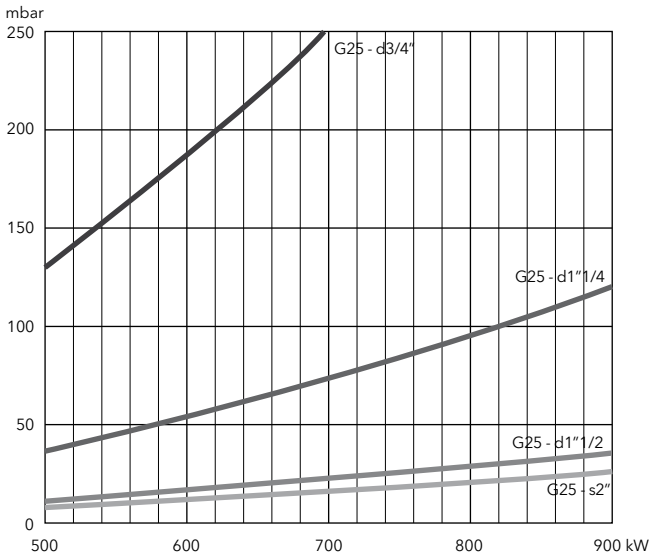

LPG

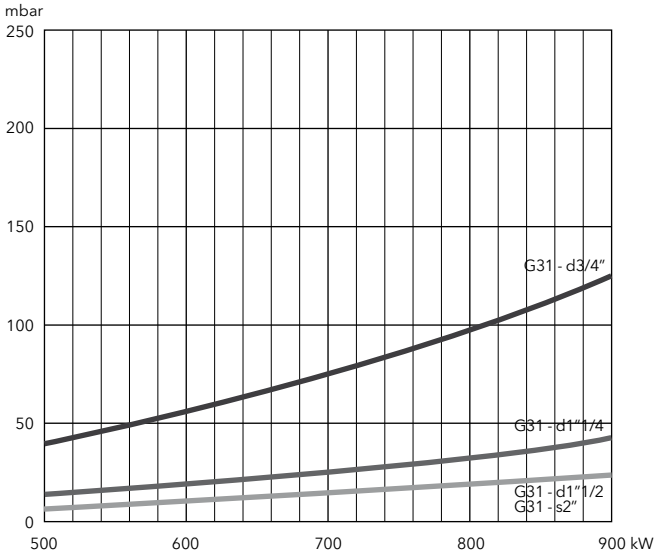

AGP MDE2 RTC LOW NOx CLASS 3

PRESSURE LOSS [BURNER HEAD + GAS TRAIN] (mbar)

VG 5.1200 DP

Burner output (kW)	Natural gas G20 Hi = 10,35 kWh/m³				Natural gas G25 Hi = 8,83 kWh/m³				LPG G31 Hi = 25,89 kWh/m³		
	d1"1/4-Rp2"	d1"1/2-Rp2"	s2"-Rp2"	s65-Rp2"	d1"1/4-Rp2"	d1"1/2-Rp2"	s2"-Rp2"	s65-Rp2"	d1"1/4-Rp2"	d1"1/2-Rp2"	s2"-Rp2"
750	56	18	14	12	82	24	19	14	28	14	14
800	65	21	16	13	92	27	22	16	32	16	16
850	74	24	18	15	105	30	25	18	36	18	18
900	83	27	20	17	118	33	28	20	41	20	20
950	94	30	22	19	131	37	31	23	46	22	22
1000	103	33	25	21	145	42	34	26	51	24	25
1050	113	37	27	23	160	47	38	28	56	27	27
1100	124	40	30	25	175	51	42	31	61	30	30
1150	136	44	33	27	192	55	46	34	67	33	33

Natural gas G20

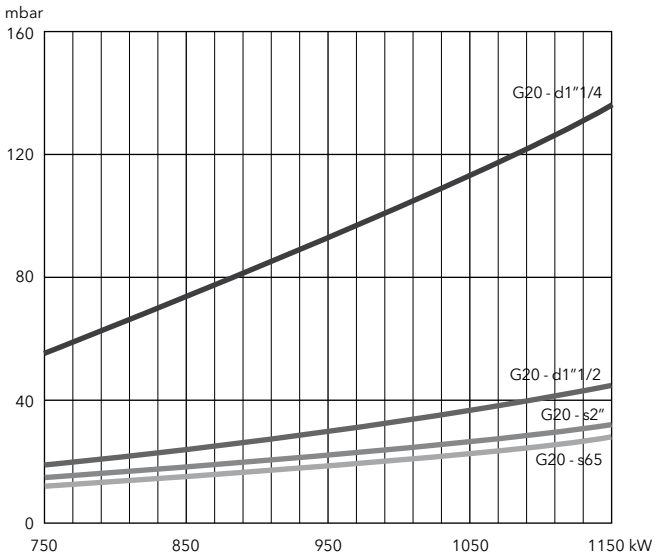

Natural gas G25

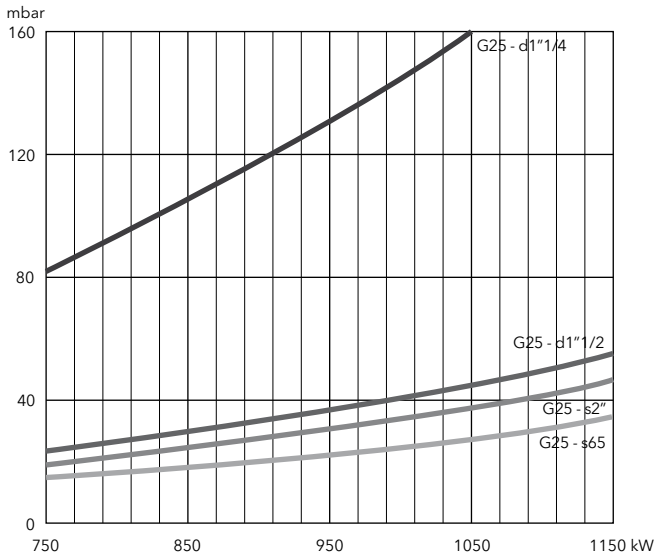

LPG

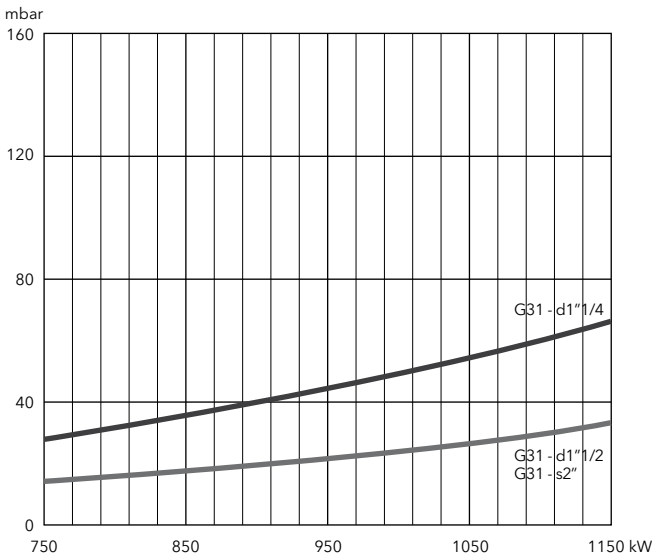

VG 6.1600 DP, VG 6.2100 DP

300 ... 1900 kW
2 stage progressive/modulating pneumatic (Low NOx class 3)

- **Fuels:** natural gas (G20/G25, H_u = 8,83…10,35 kWh/m³);
  LPG (G31, H_u = 25,89 kWh/m³)
- **Emission class:** Low NOx class 3 (<80 mg/kWh) according to EN676
- **Operation:** two stage progressive or modulating with the installation of a power regulator and dedicated probes (see pag. 156)
- **Protection level:** IP 21

TECHNICAL DATA

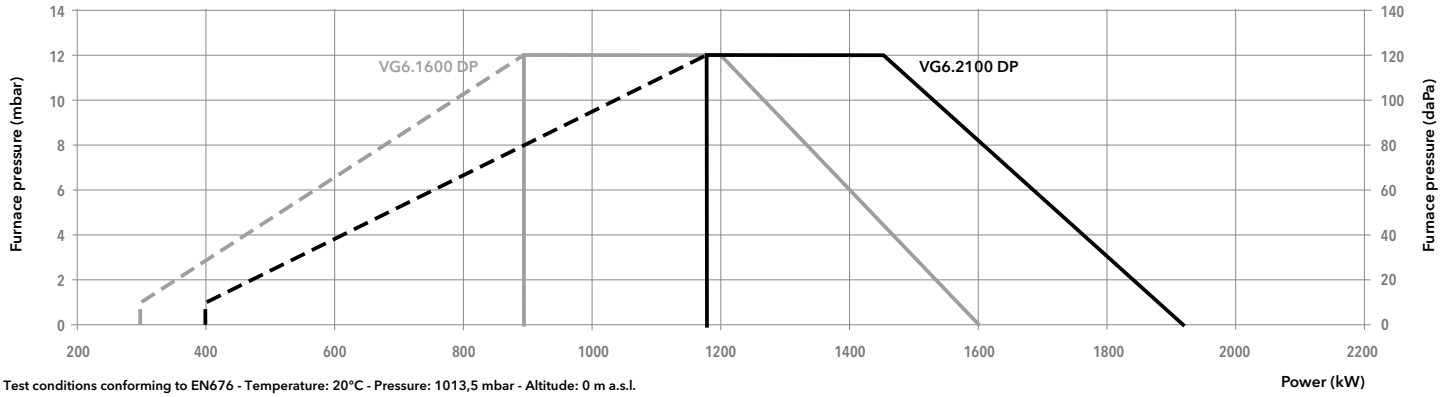

Test conditions conforming to EN676 - Temperature: 20°C - Pressure: 1013,5 mbar - Altitude: 0 m a.s.l.

Model			VG 6.1600 DP /TC			VG 6.2100 DP /TC		
Operation range			(300) 890 - 1600 kW			(400) 1180 - 1900 kW		
Gas pressure			20 - 300 mbar			20 - 300 mbar		
Control box / flame detection			TCG 5.. / ionization			TCG 5.. / ionization		
Fan motor			230/400 V - 50 Hz - 2,2 kW			230/400 V - 50 Hz - 2,7 kW		
Electrical consumption			76 + 2325 W			74 + 2622 W		
Acoustic level (LpA)			77,2 dB(A)			79 dB(A)		
CE certificate			1312 CN 5685			1312 CN 5685		
Head lenght			KN	KL	KM	KN	KL	KM
Complete burner code	VGD 40-080	s80-DN80/TC	-	-	-	**3833757**	**3833758**	**3833759**
	VGD 40-065	s65-DN65/TC	**3833745**	**3833746**	**3833747**	**3833760**	**3833761**	**3833762**
	VGD 20-5011	s2"-Rp2"/TC	**3833748**	**3833749**	**3833750**	**3833763**	**3833764**	**3833765**
	MB-VEF 420	d1"1/2-Rp2"/TC	**3833751**	**3833752**	**3833753**	**3833766**	**3833767**	**3833768**
	MB-VEF 412	d1"1/4-Rp2"/TC	**3833754**	**3833755**	**3833756**	**3833769**	**3833770**	**3833771**

OTHER AVAILABLE VERSIONS

60 60 Hz version

VEMT Versions for continuous ventilation and post-ventilation

SCOPE OF SUPPLY

The burner is delivered in its package complete with:
- 1 burner head with flange seal and securing screws
- 1 compact gas train with gas filter; the gas filter is built-in for threaded valves (up to 2") and separated for flanged ones (DN65/80/100)
- 1 bag containing installation fittings
- 1 bag containing technical documentation (instruction manual, technical data, electrical diagram, exploded view and spare parts list)

AGP MDE2 RTC LOW NOx CLASS 3

DIMENSIONS (mm)

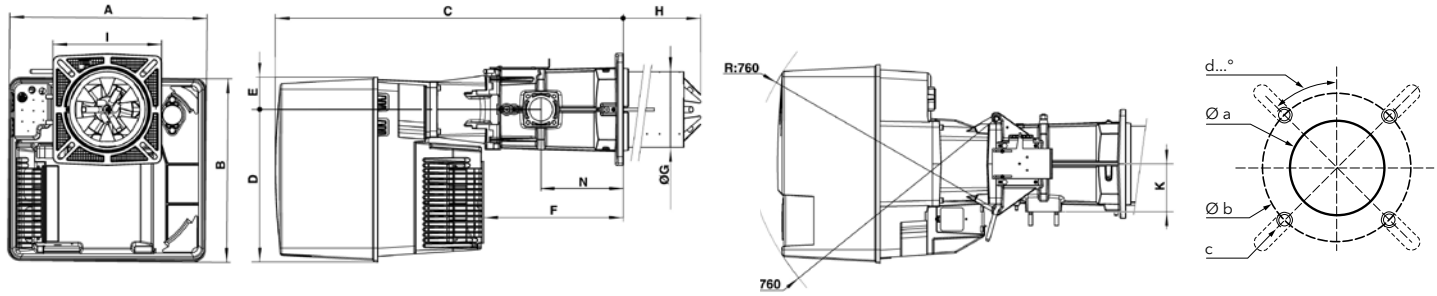

A	B	C	D	E	F	ØG	H			I	K	N
							KN	KM	KL			
592	553	1050	456	97	421	227	360	460	560	326x335	144	247

Øa (mm)	b (mm)	c	d
250	300-400	M12	45°

Gas trains

Gas train "d":

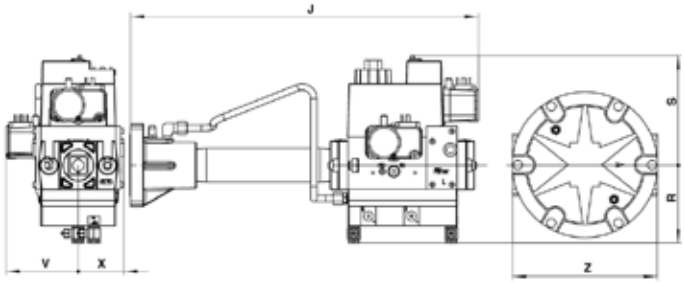

Model	J	R	S	V	X	Z
d1"1/2-Rp2"/TC	540	123	190	95	55	-
d1"1/4-Rp2"/TC	450	100	141	95	58	186

Gas train "s":

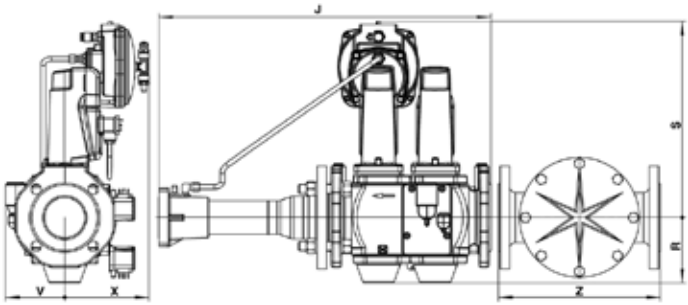

Model	J	R	S	V	X	Z
s80-DN80/TC	600	120	350	110	150	320
s65-DN65/TC	600	135	360	110	150	290
s2"-Rp2"/TC	612	103	330	110	150	186

PACKAGING

The burner is delivered on a pallet in 3 packages containing:
- burner housing
- combustion head
- gas train and filter

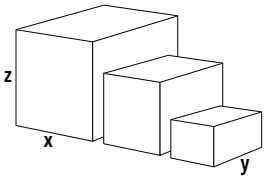

Component		Dimensions (mm)			Gross weight (kg)
		X	Y	Z	
Burner body	**VG 6.1600 DP**	800	600	850	67,8
	VG 6.2100 DP	800	600	850	69,2
Combustion head	**KN**	1000	380	420	26,7
	KL	1100	380	430	29,4
	KM	1100	380	430	28
Gas train	**s80-DN80/TC**	790	600	500	39
	s65-DN65/TC	790	600	500	29,4
	s2"-Rp2"/TC	790	600	500	16,5
	d1"1/2-Rp2"/TC	670	550	380	14,3
	d1"1/4-Rp2"/TC	670	550	380	13

VG 6.1600 DP, VG 6.2100 DP

300 ... 1900 kW
2 stage progressive/modulating pneumatic (Low NOx class 3)

PRESSURE LOSS [BURNER HEAD + GAS TRAIN] (mbar)

VG 6.1600 DP

Burner output (kW)	Natural gas G20 Hi = 10,35 kWh/m³				Natural gas G25 Hi = 8,83 kWh/m³				LPG G31 Hi = 25,89 kWh/m³		
	d1"1/4-Rp2"	d1"1/2-Rp2"	s2"-Rp2"	s65-DN65	d1"1/4-Rp2"	d1"1/2-Rp2"	s2"-Rp2"	s65-DN65	d1"1/4-Rp2"	d1"1/2-Rp2"	s2"-Rp2"
900	53	18	9	7	77	27	14	9	20	8	6
1000	66	23	12	8	93	33	17	12	24	10	7
1100	80	28	14	10	113	40	21	14	29	12	9
1200	95	33	17	12	136	48	25	17	35	15	10
1300	112	39	20	14	158	57	29	20	41	17	12
1400	129	45	23	16	182	66	34	23	47	20	14
1500	148	51	26	19	209	76	39	27	54	23	16
1600	168	58	30	21	238	86	45	30	62	26	19

Natural gas G20

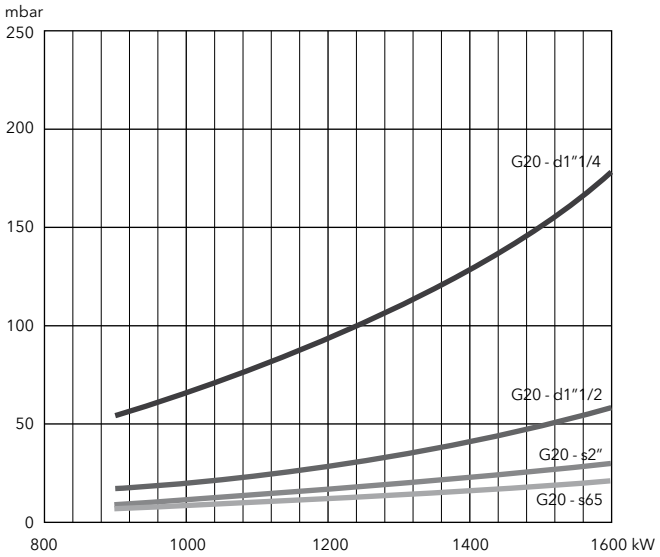

Natural gas G25

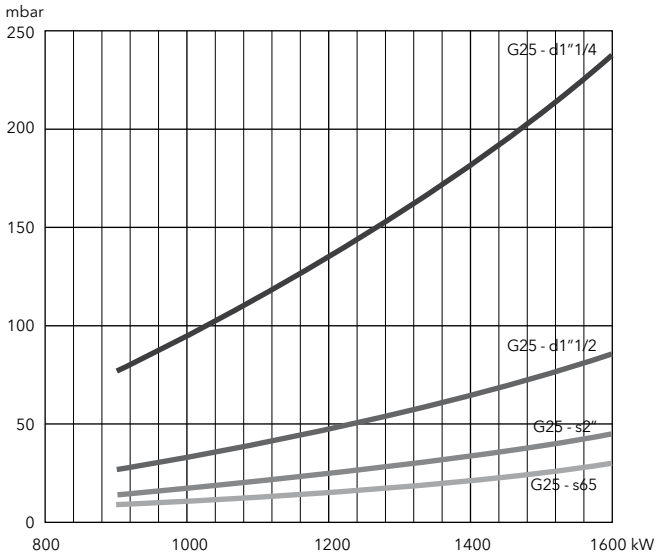

LPG

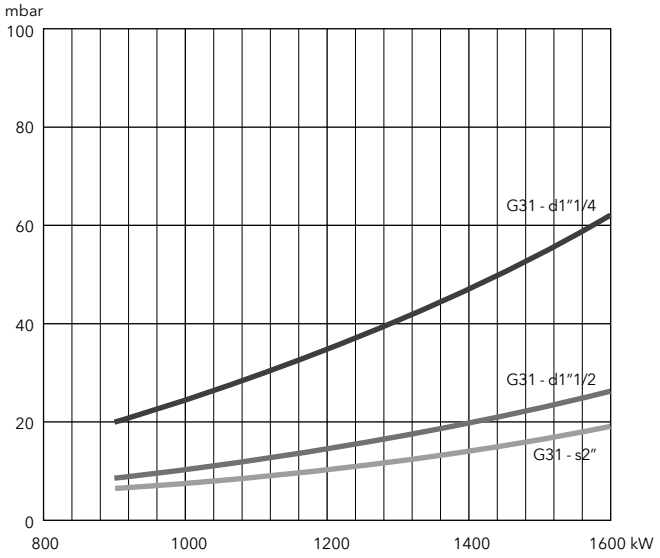

AGP MDE2 RTC LOW NOx CLASS 3

PRESSURE LOSS [BURNER HEAD + GAS TRAIN] (mbar)

VG 6.2100 DP

Burner output (kW)	Natural gas G20 Hi = 10,35 kWh/m³					Natural gas G25 Hi = 8,83 kWh/m³					LPG G31 Hi= 25,89 kWh/m³		
	d1"1/4-Rp2	d1"1/2-Rp2	s2"-Rp2"	s65-DN65	s80-DN80	d1"1/4-Rp2	d1"1/2-Rp2	s2"-Rp2"	s65-DN65	s80-DN80	d1"1/4-Rp2	d1"1/2-Rp2	s2"-Rp2"
1200	70	28	17	12	10	81	32	20	14	12	39	13	8
1300	82	32	20	14	12	95	38	24	16	14	46	15	10
1400	95	37	24	16	14	110	44	28	19	16	53	17	11
1500	109	43	27	18	16	128	50	32	21	19	61	20	13
1600	124	49	31	21	18	144	57	36	24	21	69	23	15
1700	140	55	35	24	21	163	64	40	27	24	78	26	17
1800	157	61	39	26	23	183	71	45	30	27	87	29	19
1900	175	69	43	29	25	204	79	50	34	31	97	32	21

Natural gas G20

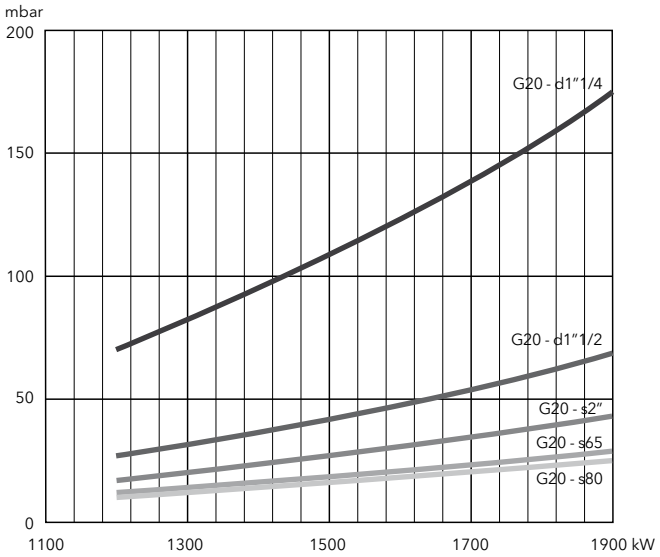

Natural gas G25

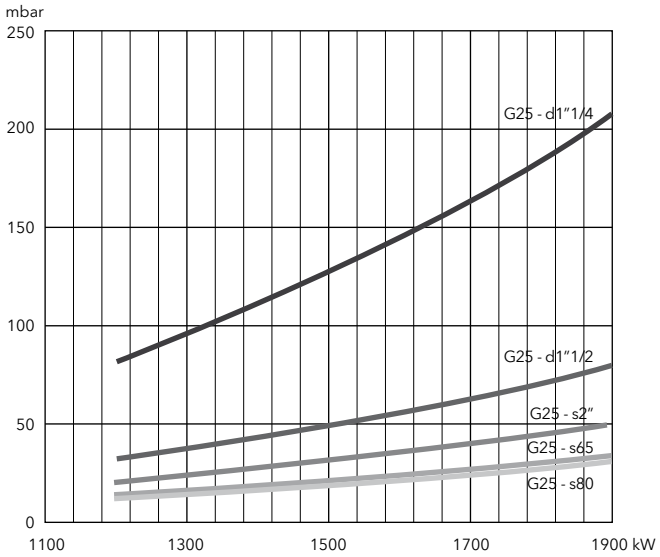

LPG

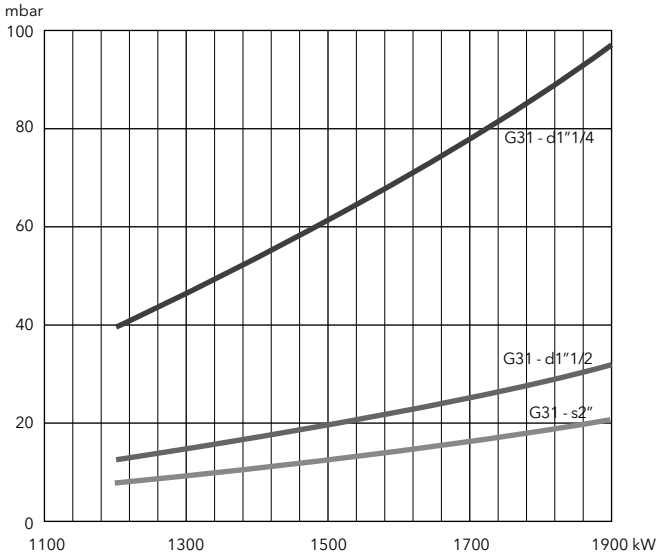

VG 5.950 DP R, VG 5.1200 DP R

150 ... 1200 kW
2 stage progressive/modulating pneumatic

- **Fuels:** natural gas (G20/G25, H_u = 8,83…10,35 kWh/m³);
  LPG (G31, H_u = 25,89 kWh/m³)
- **Emission class:** Low NOx class 2 (<120 mg/kWh) according to EN676
- **Operation:** two stage progressive or modulating with the installation of a power regulator and dedicated probes (see pag. 156)
- **Protection level:** IP 21

TECHNICAL DATA

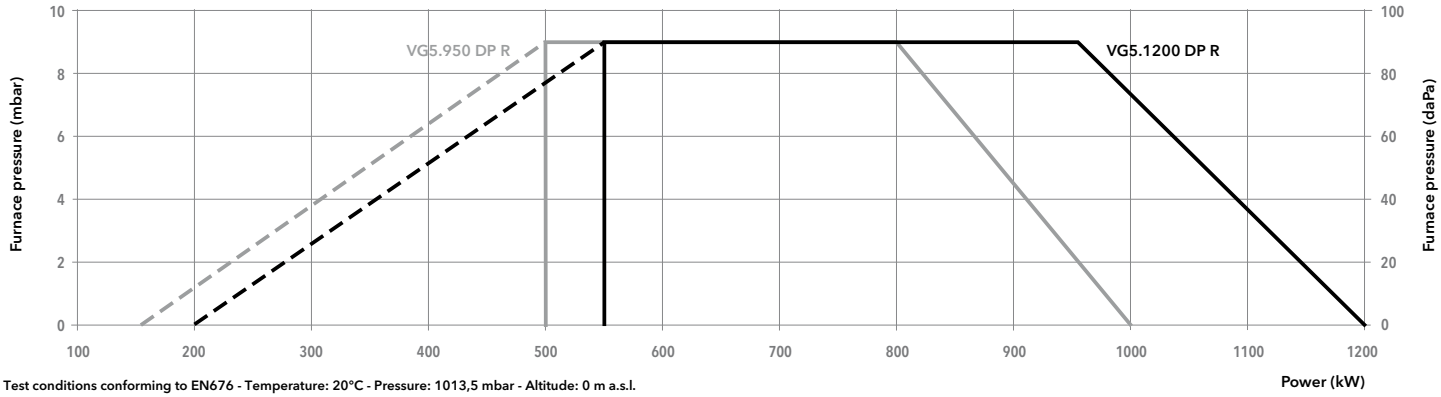

Test conditions conforming to EN676 - Temperature: 20°C - Pressure: 1013,5 mbar - Altitude: 0 m a.s.l.

Model			VG 5.950 DP R			VG 5.1200 DP R		
Operation range			(150) 500 - 1000 kW			(200) 550 - 1200 kW		
Gas pressure			20 - 500 mbar			20 - 500 mbar		
Control box / flame detection			TCG 5.. / ionization			TCG 5.. / ionization		
Fan motor			230/400 V - 50 Hz - 1,5 kW			230/400 V - 50 Hz - 1,5 kW		
Electrical consumption			100 + 2200 W			100 + 2300 W		
Acoustic level (LpA)			77 dB(A)			77 dB(A)		
CE certificate			0085 CQ 0570			0085 CQ 0570		
Head lenght			KN	KL	KM	KN	KL	KM
Complete burner code	VGD 40-065	s65-DN65	-	-	-	**3835377**	**3835378**	**3835379**
	VGD 20-5011	s2"-Rp2"	**3835357**	**3835366**	**3835367**	**3835380**	**3835381**	**3835382**
	MB-VEF 420	d1"1/2-Rp2"	**3835368**	**3835369**	**3835370**	**3835383**	**3835384**	**3835385**
	MB-VEF 412	d1"1/4-Rp2"	**3835371**	**3835372**	**3835373**	**3835386**	**3835387**	**3835388**
	MB-VEF 407	d3/4"-Rp1"	**3835374**	**3835375**	**3835376**	-	-	-

OTHER AVAILABLE VERSIONS

60 60 Hz version
TC Version with tightness control
VENT Versions for continuous ventilation and post-ventilation

SCOPE OF SUPPLY

The burner is delivered in its package complete with:
- 1 burner head with flange seal and securing screws
- 1 compact gas train with gas filter; the gas filter is built-in for threaded valves (up to 2") and separated for flanged ones (DN65/80/100)
- 1 bag containing installation fittings
- 1 bag containing technical documentation (instruction manual, technical data, electrical diagram, exploded view and spare parts list)

AGP MDE2 RTC

DIMENSIONS (mm)

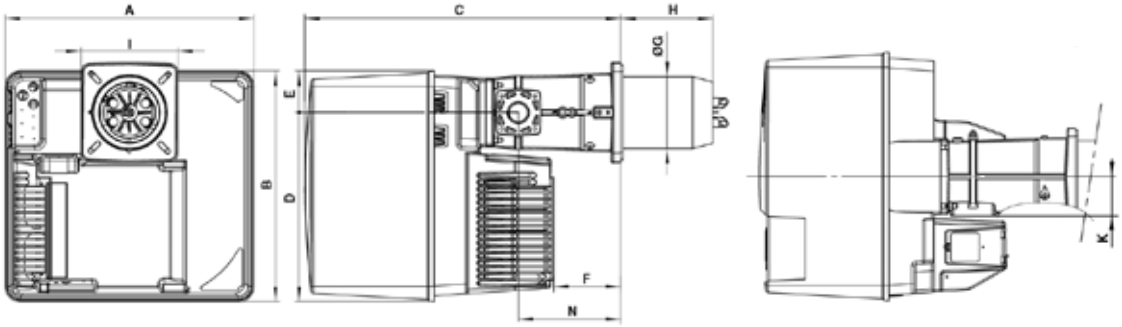

Connecting flange

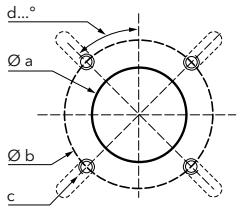

A	B	C	D	E	F	ØG	H			I	K	N
							KN	KM	KL			
581	549	752	450	99	164	170	215	325	435	230x238	89	244

Øa (mm)	b (mm)	c	d
195	220-260	M10	45°

Gas trains

Gas train "d":

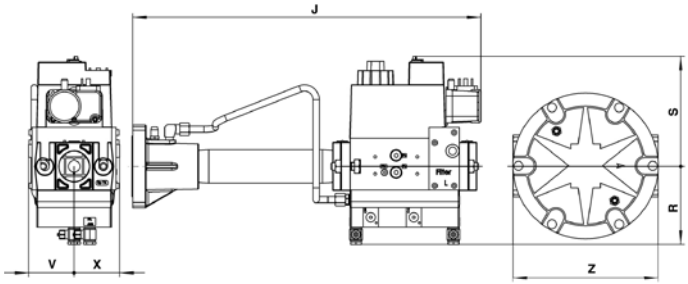

Model	J	R	S	V	X	Z
d1"1/2-Rp2"	540	123	190	55	55	-
d1"1/4-Rp2"	450	100	141	58	58	186
d3/4"-Rp1"	420	100	122	55	50	160

Gas train "s":

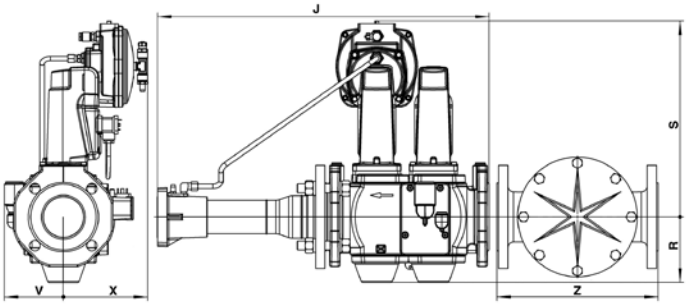

Model	J	R	S	V	X	Z
s65-DN65	600	135	360	110	150	290
s2"-Rp2"	612	103	330	110	150	186

PACKAGING

The burner is delivered on a pallet in 3 packages containing:

- burner housing
- combustion head
- gas train and filter

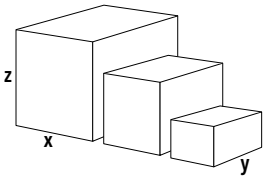

Component		Dimensions (mm)			Gross weight (kg)
		X	Y	Z	
Burner body	VG 5.950 DP R	800	600	850	55
	VG 5.1200 DP R	800	600	850	56
Combustion head	KN	780	265	280	12,3
	KL	1010	265	280	14,4
	KM	1010	265	280	13,4
Gas train	s65-DN65	670	530	380	29
	s2"-Rp2"	670	530	380	17,2
	d1"1/2-Rp2"	400	570	200	12
	d1"1/4-Rp2"	590	390	180	12
	d3/4"-Rp1"	590	390	180	7

VG 5.950 DP R, VG 5.1200 DP R

150 ... 1200 kW
2 stage progressive/modulating pneumatic

PRESSURE LOSS [BURNER HEAD + GAS TRAIN] (mbar)

VG 5.950 DP R

Burner output (kW)	Natural gas G20 Hi = 10,35 kWh/m³				Natural gas G25 Hi = 8,83 kWh/m³				LPG G31 Hi= 25,89 kWh/m³			
	d3/4"-Rp1"	d1"1/4-Rp2"	d1"1/2-Rp2"	s2"-Rp2"	d3/4"-Rp1"	d1"1/4-Rp2"	d1"1/2-Rp2"	s2"-Rp2"	d3/4"-Rp1"	d1"1/4-Rp2"	d1"1/2-Rp2"	s2"-Rp2"
500	87	18	11	7	129	26	15	11	40	11	8	7
600	120	24	14	10	179	36	21	15	55	15	11	9
700	167	34	20	14	248	51	30	21	77	21	15	13
800	214	43	25	18	-	65	38	27	98	27	19	16
900	-	56	33	23	-	83	48	34	126	35	25	21
1000	-	68	40	28	-	101	59	42	153	42	30	26

Natural gas G20

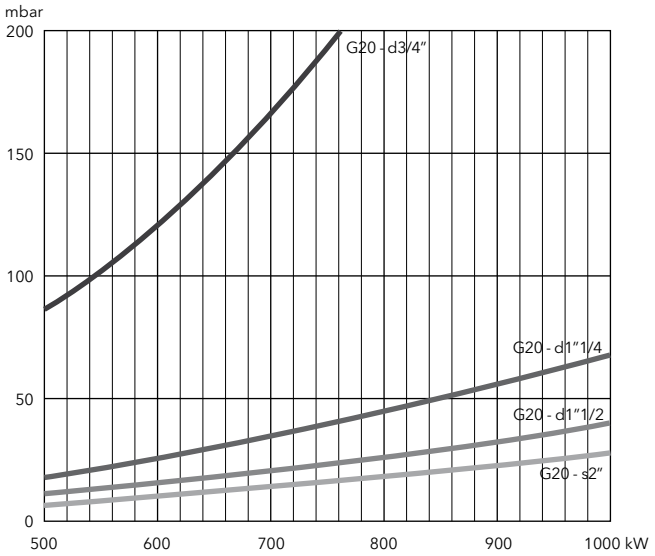

Natural gas G25

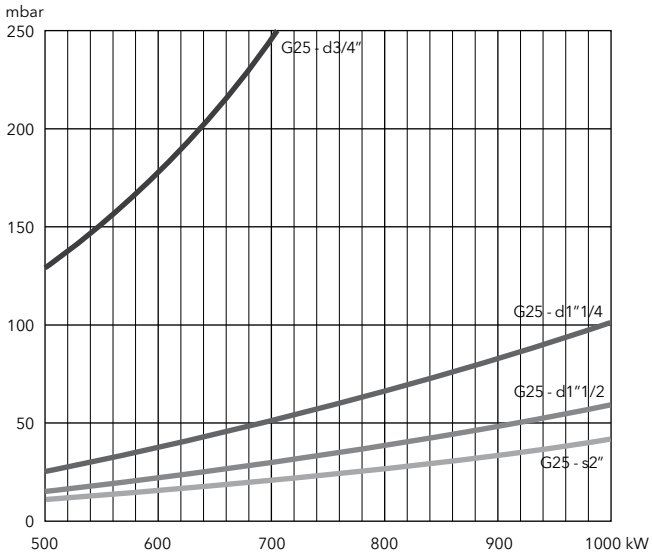

LPG

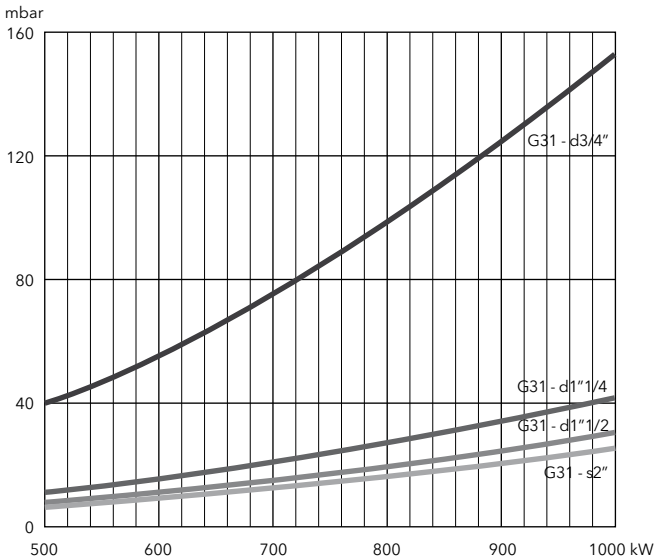

AGP MDE2 RTC

PRESSURE LOSS [BURNER HEAD + GAS TRAIN] (mbar)

VG 5.1200 DP R

Burner output (kW)	Natural gas G20 Hi = 10,35 kWh/m³				Natural gas G25 Hi = 8,83 kWh/m³				LPG G31 Hi = 25,89 kWh/m³		
	d1"1/4-Rp2"	d1"1/2-Rp2"	s2"-Rp2"	s65-Rp2"	d1"1/4-Rp2"	d1"1/2-Rp2"	s2"-Rp2"	s65-Rp2"	d1"1/4-Rp2"	d1"1/2-Rp2"	s2"-Rp2"
700	30	16	10	8	45	24	16	12	16	10	8
800	39	21	14	10	58	32	20	16	21	13	10
900	50	27	18	13	74	40	26	20	26	17	13
1000	61	33	21	16	91	49	32	25	33	21	16
1100	74	40	26	20	110	60	39	30	40	26	19
1200	88	48	31	24	132	71	46	35	47	30	23

Natural gas G20

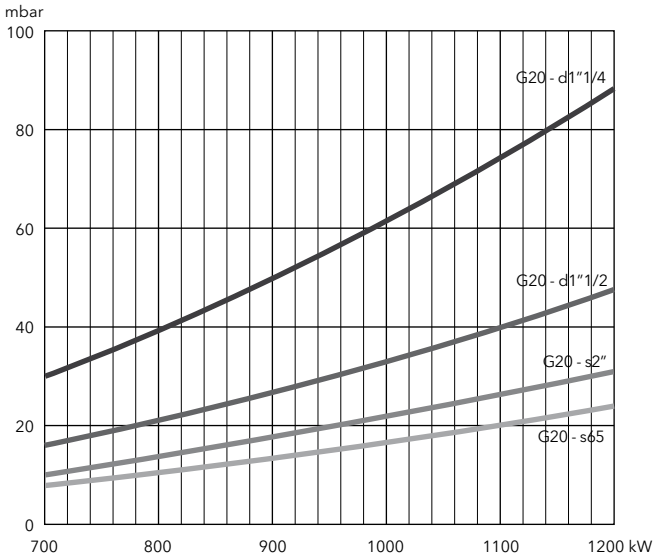

Natural gas G25

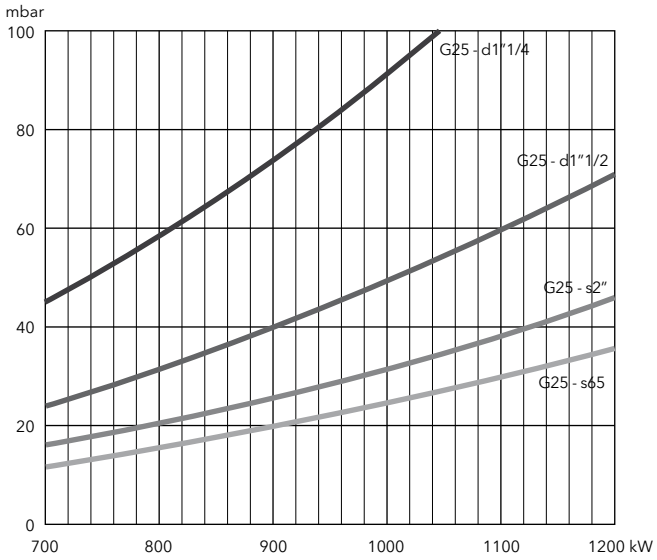

LPG

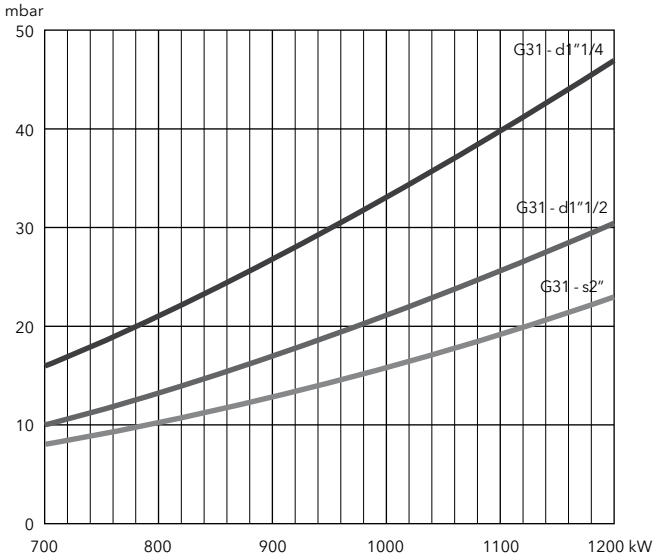

VG 6.1600 DP R, VG 6.2100 DP R

200 ... 2300 kW
2 stage progressive/modulating pneumatic

- **Fuels:** natural gas (G20/G25, H_u = 8,83…10,35 kWh/m³);
  LPG (G31, H_u = 25,89 kWh/m³)
- **Emission class:** Low NOx class 2 (<120 mg/kWh) according to EN676
- **Operation:** two stage progressive or modulating with the installation of a power regulator and dedicated probes (see pag. 156)
- **Protection level:** IP 21

TECHNICAL DATA

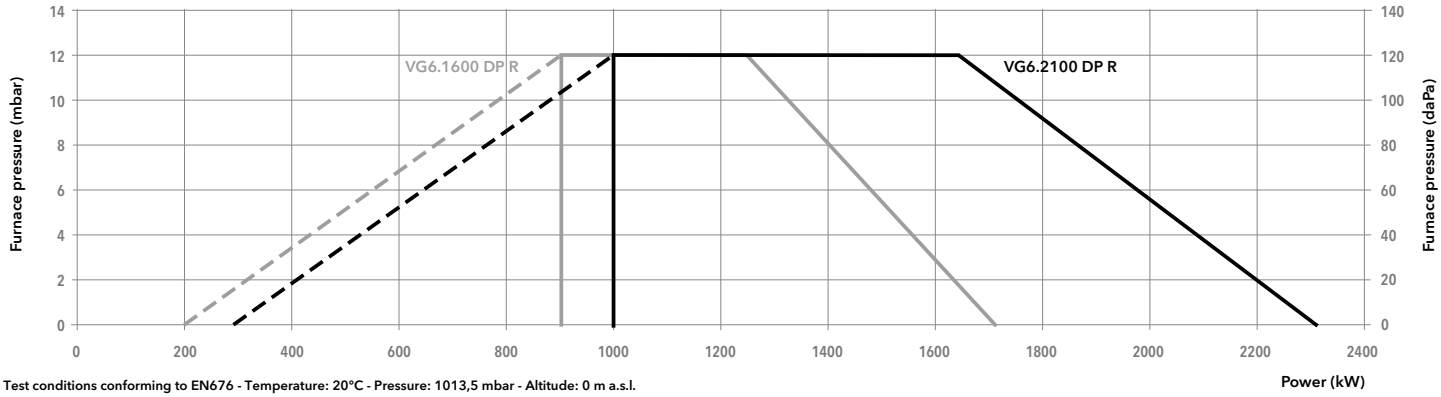

Test conditions conforming to EN676 - Temperature: 20°C - Pressure: 1013,5 mbar - Altitude: 0 m a.s.l.

Model			VG 6.1600 DP R /TC			VG 6.2100 DP R /TC		
Operation range			(200) 900 - 1700 kW			(300) 1000- 2300 kW		
Gas pressure			20 - 500 mbar			20 - 500 mbar		
Control box / flame detection			TCG 5.. / ionization			TCG 5.. / ionization		
Fan motor			230/400 V - 50 Hz - 2,2 kW			230/400 V - 50 Hz - 2,7 kW		
Electrical consumption			100 + 2500 W			100 + 3500 W		
Acoustic level (LpA)			77 dB(A)			79 dB(A)		
CE certificate			0085 CQ 0570			0085 CQ 0570		
Head lenght			KN	KL	KM	KN	KL	KM
Complete burner code	VGD 40-080	s80-DN80/TC	-	-	-	**3835911**	**3835910**	**3835909**
	VGD 40-065	s65-DN65/TC	**3834801**	**3834802**	**3834803**	**3834813**	**3834814**	**3834815**
	VGD 20-5011	s2"-Rp2"/TC	**3834804**	**3834805**	**3834806**	**3834816**	**3834817**	**3834818**
	MB-VEF 420	d1"1/2-Rp2"/TC	**3834807**	**3834808**	**3834809**	**3834819**	**3834820**	**3834821**
	MB-VEF 412	d1"1/4-Rp2"/TC	**3834810**	**3834811**	**3834812**	**3834822**	**3834823**	**3834824**

OTHER AVAILABLE VERSIONS

60 60 Hz version

V_{EMT} Versions for continuous ventilation and post-ventilation

SCOPE OF SUPPLY

The burner is delivered in its package complete with:
- 1 burner head with flange seal and securing screws
- 1 compact gas train with gas filter; the gas filter is built-in for threaded valves (up to 2") and separated for flanged ones (DN65/80/100)
- 1 bag containing installation fittings
- 1 bag containing technical documentation (instruction manual, technical data, electrical diagram, exploded view and spare parts list)

AGP MDE2 RTC

DIMENSIONS (mm)

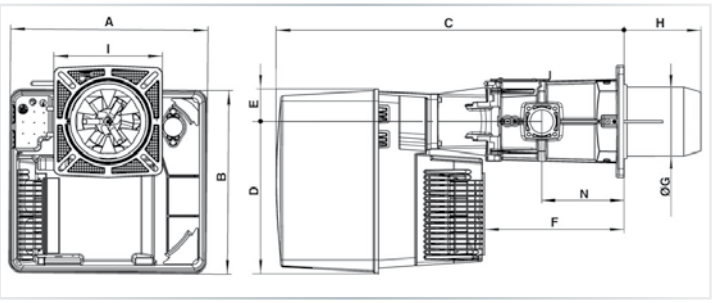

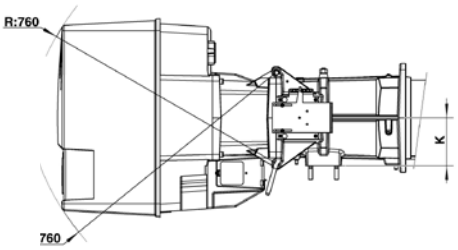

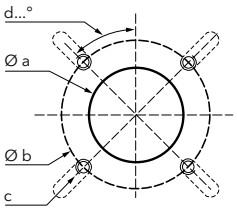

A	B	C	D	E	F	ØG	H			I	K	N
							KN	KM	KL			
592	553	1050	456	97	421	227	270	370	470	326x335	144	247

Øa (mm)	b (mm)	c	d
250	300-400	M12	45°

Gas trains

Gas train "d":

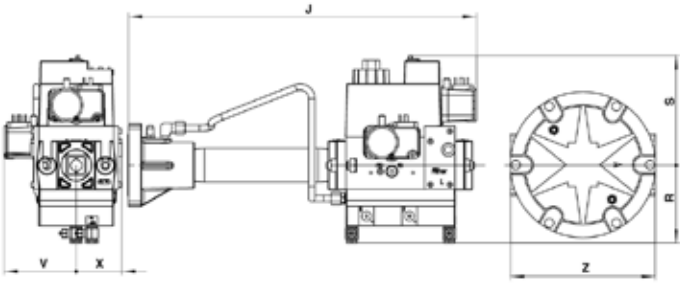

Model	J	R	S	V	X	Z
d1"1/2-Rp2"/TC	540	123	190	95	55	-
d1"1/4-Rp2"/TC	450	100	141	95	58	186

Gas train "s":

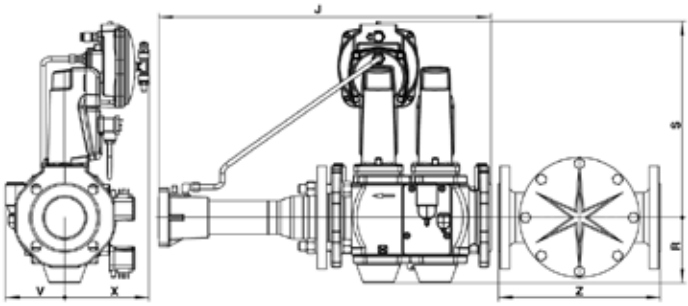

Model	J	R	S	V	X	Z
s80-DN80/TC	600	120	350	110	150	320
s65-DN65/TC	600	135	360	110	150	290
s2"-Rp2"/TC	612	103	330	110	150	186

PACKAGING

The burner is delivered on a pallet in 3 packages containing:
- burner housing
- combustion head
- gas train and filter

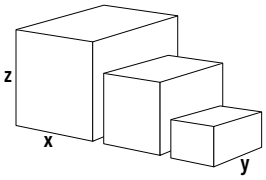

Component		Dimensions (mm)			Gross weight (kg)
		X	Y	Z	
Burner body	**VG 6.1600 DP R**	800	600	850	67,8
	VG 6.2100 DP R	800	600	850	69,2
Combustion head	**KN**	1000	380	420	26,7
	KL	1100	380	430	29,4
	KM	1100	380	430	28
Gas train	**s80-DN80/TC**	670	530	380	39
	s65-DN65/TC	670	530	380	29,4
	s2"-Rp2"/TC	670	530	380	16,5
	d1"1/2-Rp2"/TC	400	570	200	14,3
	d1"1/4-Rp2"/TC	590	390	180	13

VG 6.1600 DP R, VG 6.2100 DP R

200 ... 2300 kW
2 stage progressive/modulating pneumatic

PRESSURE LOSS [BURNER HEAD + GAS TRAIN] (mbar)

VG 6.1600 DP R

Burner output (kW)	Natural gas G20 Hi = 10,35 kWh/m³				Natural gas G25 Hi = 8,83 kWh/m³				LPG G31 Hi = 25,89 kWh/m³			
	d1"1/4-Rp2"	d1"1/2-Rp2"	s2"-Rp2"	s65-DN65	d1"1/4-Rp2"	d1"1/2-Rp2"	s2"-Rp2"	s65-DN65	d1"1/4-Rp2"	d1"1/2-Rp2"	s2"-Rp2"	s65-DN65
800	34	16	8	5	52	24	12	8	16	8	5	4
1000	52	24	12	8	78	36	18	12	24	12	8	6
1200	76	35	18	11	113	53	27	17	35	18	11	8
1400	103	48	24	15	153	71	37	22	47	24	15	11
1600	135	62	32	20	202	93	48	29	62	32	19	14

Natural gas G20

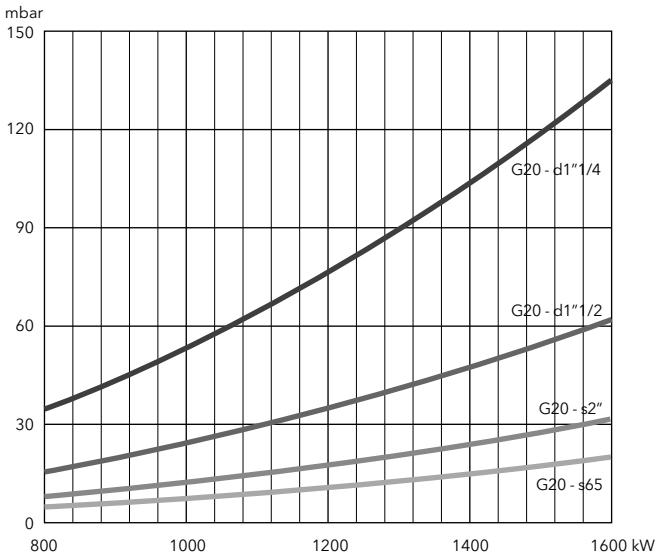

Natural gas G25

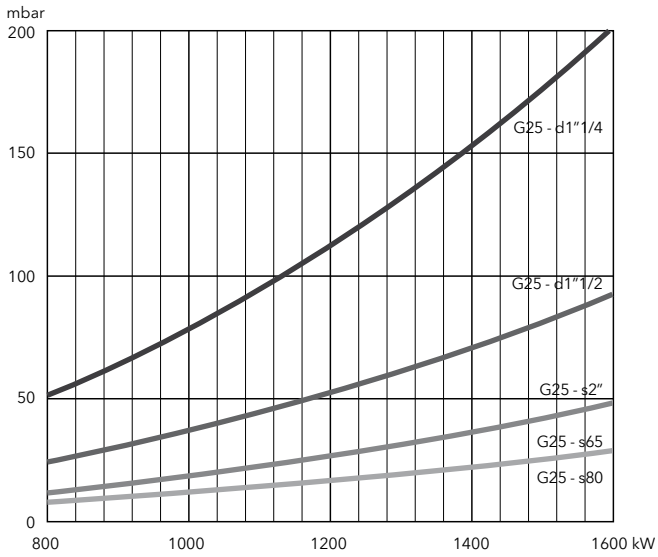

LPG

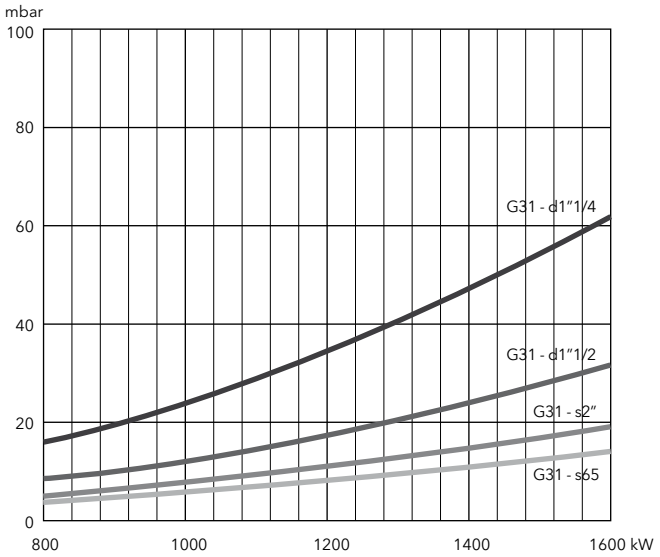

AGP MDE2 RTC

PRESSURE LOSS [BURNER HEAD + GAS TRAIN] (mbar)

VG 6.2100 DP R

Burner output (kW)	Natural gas G20 Hi = 10,35 kWh/m³					Natural gas G25 Hi = 8,83 kWh/m³					LPG G31 Hi= 25,89 kWh/m³		
	d1"1/4-Rp2"	d1"1/2-Rp2"	s2"-Rp2"	s65-DN65	s80-DN80	d1"1/4-Rp2"	d1"1/2-Rp2"	s2"-Rp2"	s65-DN65	s80-DN80	d1"1/4-Rp2"	d1"1/2-Rp2"	s2"-Rp2"
1300	87	39	19	10	7	130	58	28	16	10	38	18	10
1500	114	51	25	14	9	170	76	37	21	13	50	24	13
1700	147	66	32	18	11	220	98	48	27	17	65	31	17
1900	184	83	40	22	14	274	123	60	34	21	81	38	21
2100	225	101	49	27	17	336	151	73	41	26	99	47	26
2300	269	121	58	33	21	402	180	87	49	31	119	56	30

Natural gas G20

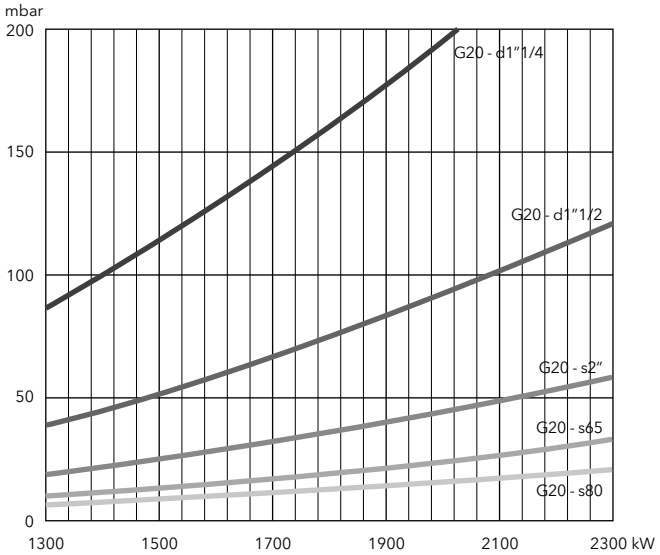

Natural gas G25

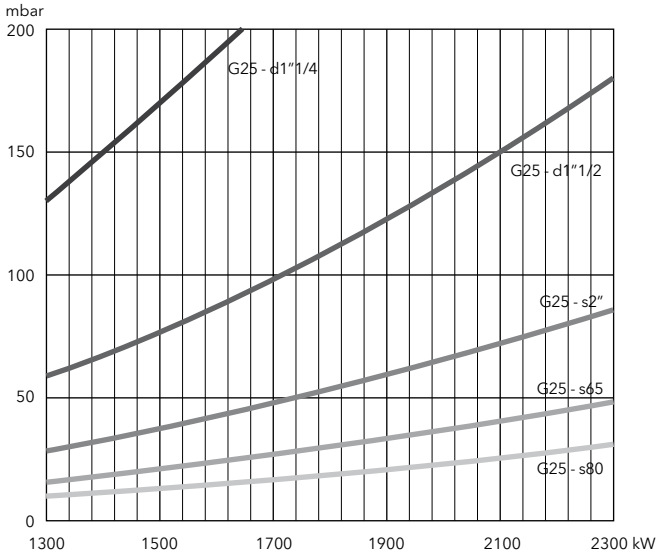

LPG

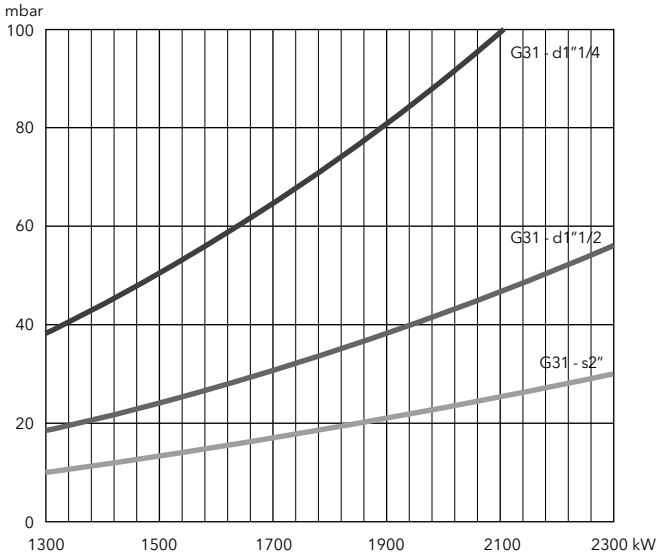

VG 2.210 V

80 ... 210 kW
2 stage progressive/modulating pneumatic + fan speed control (Low NOx class 3)

- **Fuels:** natural gas (G20/G25, H_u = 8,83…10,35 kWh/m³);
  LPG (G31, H_u = 25,89 kWh/m³)
- **Emission class:** Low NOx class 3 (<80 mg/kWh) according to EN676
- **Operation:** two stage progressive or modulating with the installation of a power regulator and dedicated probes (see pag. 156)
- **Protection level:** IP 21

TECHNICAL DATA

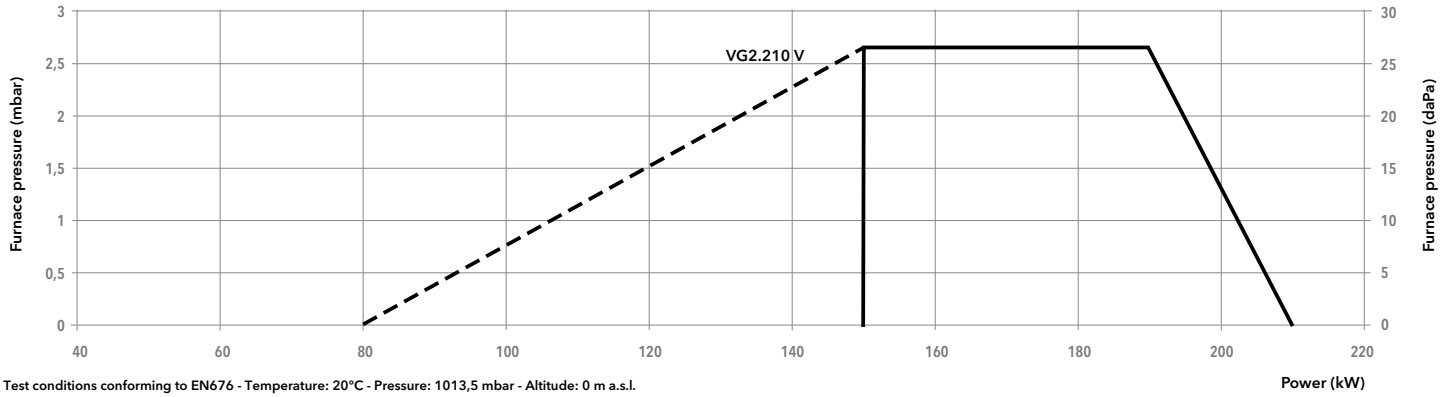

Test conditions conforming to EN676 - Temperature: 20°C - Pressure: 1013,5 mbar - Altitude: 0 m a.s.l.

Model			VG 2.210 V	
Operation range			(80) 150 - 210 kW	
Gas pressure			20 - 40 mbar for MB-VEF 412; 40 - 100 mbar for d345; 100 - 300 mbar for d346	
Control box / flame detection			TCG5... / ionization	
Fan motor			230 V - 50 Hz - 130 W	
Electrical consumption			260 W	
Acoustic level (LpA)			65,2 dB(A)	
CE certificate			1312 BQ 4069	
Head lenght			KN	KL
Complete burner code	MB-VEF 412	d1"1/4-Rp1"1/4	**3834360**	**3834361**
	MB-VEF 407	d345-3/4"-Rp3/4"	**3834416**	**3834417**
	MB-VEF 407	d346-3/4"-Rp3/4"	**3834358**	**3834359**

OTHER AVAILABLE VERSIONS

Vent Versions for continuous ventilation and post-ventilation

SCOPE OF SUPPLY

The burner is delivered in its package complete with:
- 1 gas connection flange
- 1 compact gas train with gas filter; the gas filter is built-in for threaded valves (up to 2") and separated for flanged ones (DN65/80/100)
- 1 burner flange with insulation
- 1 bag containing installation fittings
- 1 bag containing technical documentation (instruction manual, technical data, electrical diagram, exploded view and spare parts list)

Variatron MDE2 RTC LOW NOx CLASS 3

DIMENSIONS (mm)

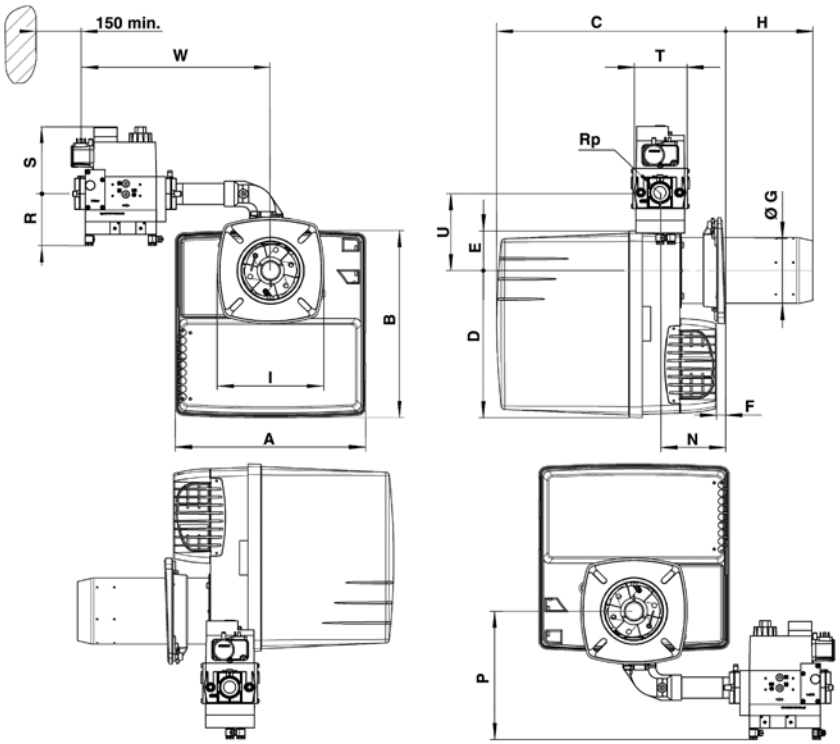

Gas train model	A	B	C		D	E	F min	ØG	H		I	N min	P	Rp	R	S	T	U	W
			KN	KL					KN	KL									
d1"1/4-Rp1"1/4	331	326	398...518	398...638	256	69	15	115	30...150	30...270	185	113	55	1"1/4	80	175	145	64	380
d345-3/4"-Rp3/4"	331	326	398...518	398...638	256	69	15	115	30...150	30...270	185	113	115	3/4"	70	160	120	64	345
d346-3/4"-Rp3/4"	331	326	398...518	398...638	256	69	15	115	30...150	30...270	185	113	115	3/4"	70	160	120	64	345

Connecting flange

Øa (mm)	b (mm)	c	d
120-135	150-184	M8	45°

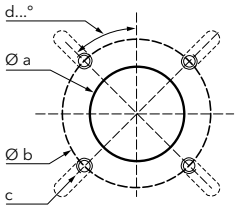

PACKAGING

The burner is delivered in 1 single package containing all components

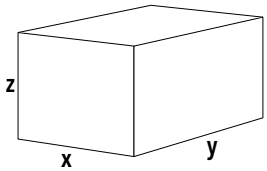

Dimensions (mm)			Gross weight (kg)
X	Y	Z	
400	400	760	21

VG 3.290 V, VG 3.360 V

70 ... 360 kW
2 stage progressive/modulating pneumatic + fan speed control (Low NOx class 3)

- **Fuels:** natural gas (G20/G25, H_u = 8,83…10,35 kWh/m³);
  LPG (G31, H_u = 25,89 kWh/m³)
- **Emission class:** Low NOx class 3 (<80 mg/kWh) according to EN676
- **Operation:** two stage progressive or modulating with the installation of a power regulator and dedicated probes (see pag. 156)
- **Protection level:** IP 41

TECHNICAL DATA

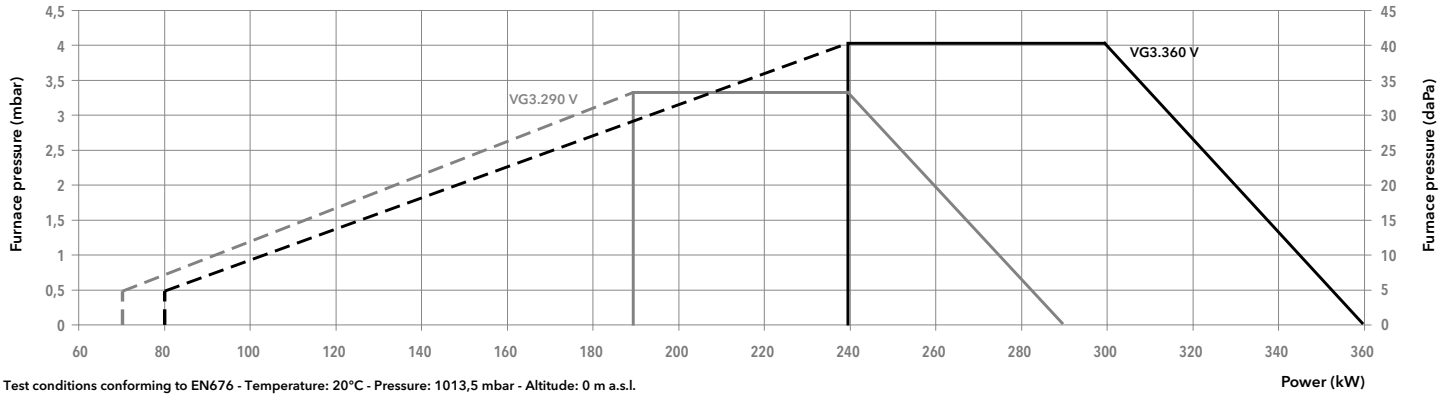

Test conditions conforming to EN676 - Temperature: 20°C - Pressure: 1013,5 mbar - Altitude: 0 m a.s.l.

Model		VG 3.290 V		VG 3.360 V	
Operation range		(70) 190 - 290 kW		(80) 240 - 360 kW	
Gas pressure		20 - 300 mbar		20 - 300 mbar	
Control box / flame detection		TCG5... / ionization		TCG5... / ionization	
Fan motor		230 V - 50 Hz - 250 W		230 V - 50 Hz - 300 W	
Electrical consumption		375 W		480 W	
Acoustic level (LpA)		67 dB(A)		69 dB(A)	
CE certificate		1312 BV 5208		1312 BV 5208	
Head lenght		KN	KL	KN	KL
Complete burner code	MB-VEF 420 d1"1/2-Rp2"	-	-	**3834427**	**3834428**
	MB-VEF 412 d1"1/4-Rp1"1/4	**3834421**	**3834422**	**3834425**	**3834426**
	MB-VEF 407 d3/4"-Rp1"	**3834419**	**3834420**	**3834423**	**3834424**

OTHER AVAILABLE VERSIONS

TC Version with tightness control

V_{ENT} Versions for continuous ventilation and post-ventilation

SCOPE OF SUPPLY

The burner is delivered in its package complete with:
- 1 burner head with flange seal and securing screws
- 1 compact gas train with gas filter; the gas filter is built-in for threaded valves (up to 2") and separated for flanged ones (DN65/80/100)
- 1 bag containing installation fittings
- 1 bag containing technical documentation (instruction manual, technical data, electrical diagram, exploded view and spare parts list)

Variatron MDE2 RTC LOW NOx CLASS 3

DIMENSIONS (mm)

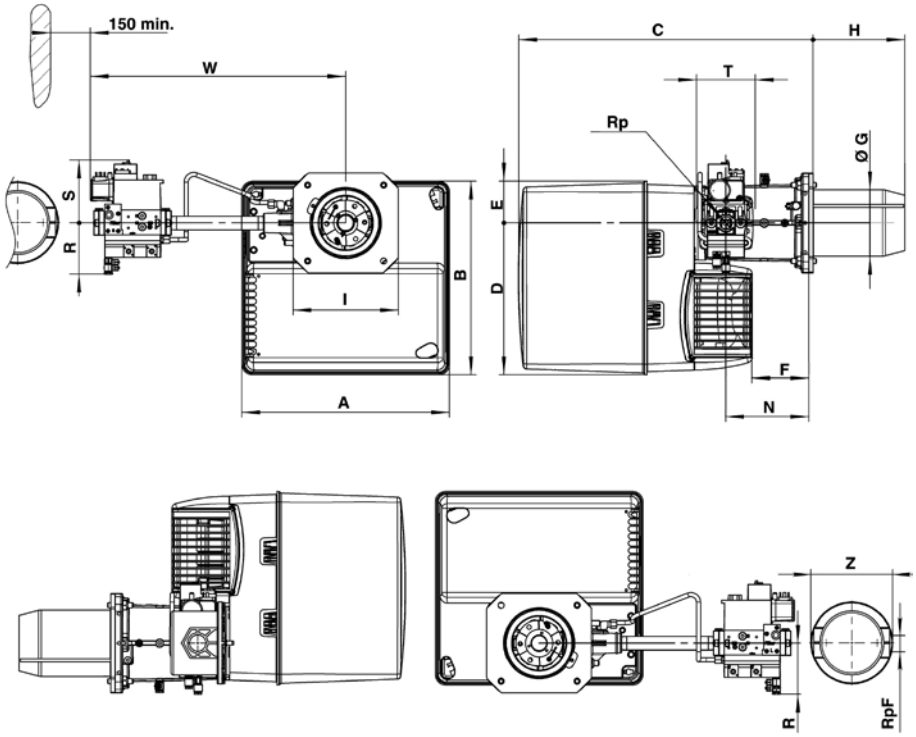

Gas train model	A	B	C	D	E	F	ØG	H		I	N	Rp	R	S	T	W	RpF	Z
								KN	KL									
d1"1/2-Rp2"	406	379	576	297	82	120	130	180	320	195x205	170	2"	100	185	100	603	-	-
d1"1/4-Rp1"1/4	406	379	576	297	82	120	130	180	320	195x205	170	1"1/4	80	175	145	526	-	-
d3/4"-Rp1"	406	379	576	297	82	120	130	180	320	195x205	170	1"	70	160	120	479	1"	160

Connecting flange

Øa (mm)	b (mm)	c	d
155-190	175-220	M10	45°

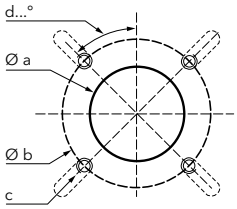

PACKAGING

The burner is delivered on a pallet in 3 packages containing:
- burner housing
- combustion head
- gas train and filter

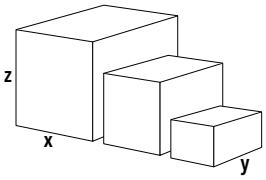

Component		Dimensions (mm)			Gross weight (kg)
		X	Y	Z	
Burner body	VG 3.290 V	440	400	520	21
	VG 3.360 V	440	400	520	22
Combustion head	KN	650	210	260	6
	KL	780	210	260	7
Gas train	d1"1/2-Rp2"	670	550	380	12
	d1"1/4-Rp1"1/4	600	400	240	11
	d3/4"-Rp1"	600	400	240	7

VG 3.290 V, VG 3.360 V

70 ... 360 kW
2 stage progressive/modulating pneumatic + fan speed control (Low NOx class 3)

PRESSURE LOSS [BURNER HEAD + GAS TRAIN] (mbar)

VG 3.290 V

Burner output (kW)	Natural gas G20 Hi = 10,35 kWh/m³	Natural gas G25 Hi = 8,83 kWh/m³		LPG G31 Hi = 25,89 kWh/m³
	d3/4"-Rp1"	d3/4"-Rp1"	d1"1/4-Rp1"1/4	d3/4"-Rp1"
190	28	41	9	12
210	34	50	10	15
230	41	59	13	18
250	48	70	15	21
270	56	82	17	25
290	65	94	20	29

Natural gas G20

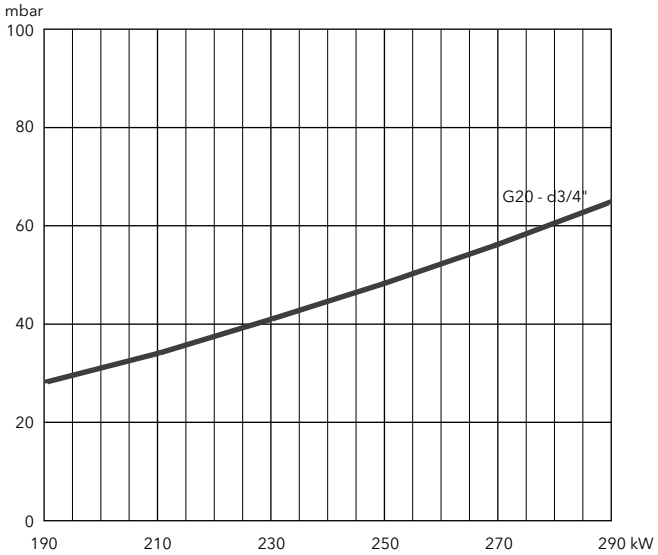

Natural gas G25

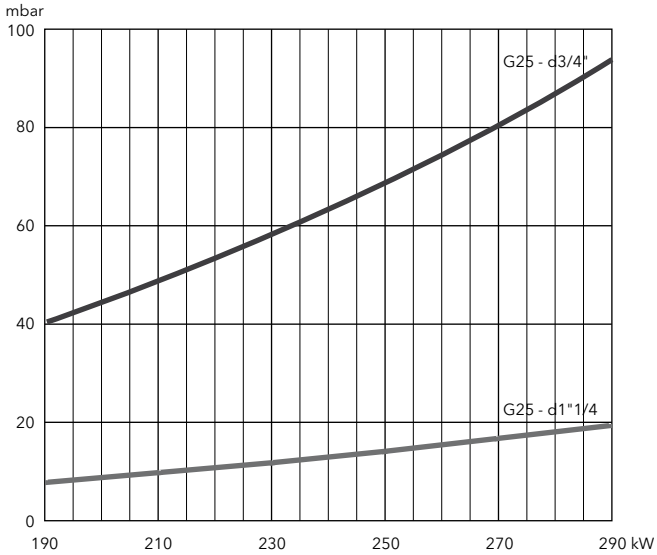

LPG

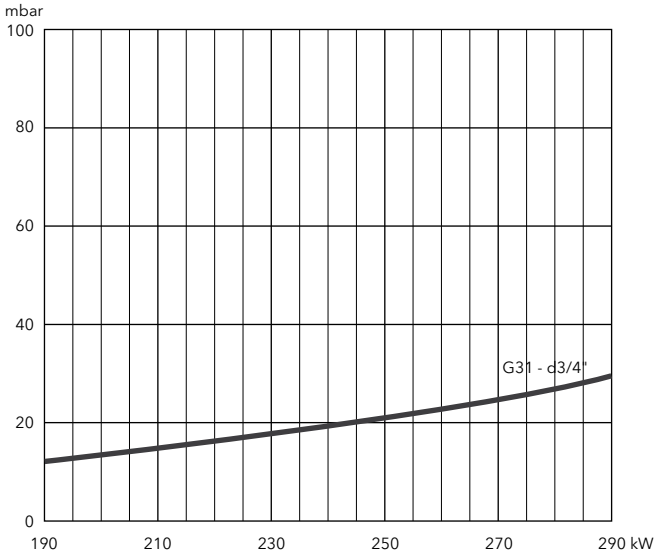

Variatron MDE2 RTC LOW NOx CLASS 3

PRESSURE LOSS [BURNER HEAD + GAS TRAIN] (mbar)

VG 3.360 V

Burner output (kW)	Natural gas G20 Hi = 10,35 kWh/m³		Natural gas G25 Hi = 8,83 kWh/m³			LPG G31 Hi = 25,89 kWh/m³
	d3/4"-Rp1"	d1"1/4-Rp1"1/4	d3/4"-Rp1"	d1"1/4-Rp1"1/4	d1"1/2-Rp2"	d3/4"-Rp1"
240	36	9	53	12	9	15
280	49	12	73	17	12	21
320	63	16	95	22	16	27
360	80	20	120	28	20	35

Natural gas G20

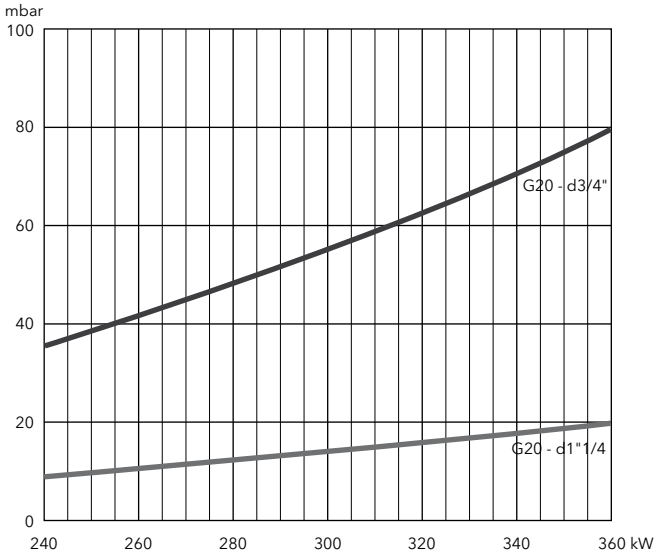

Natural gas G25

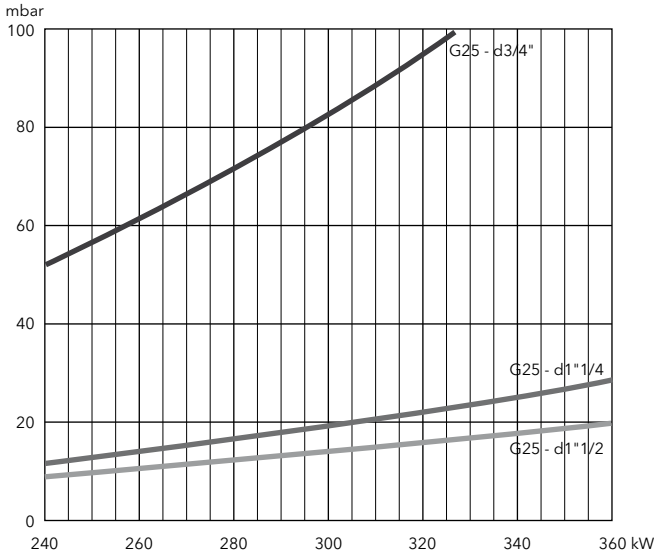

LPG

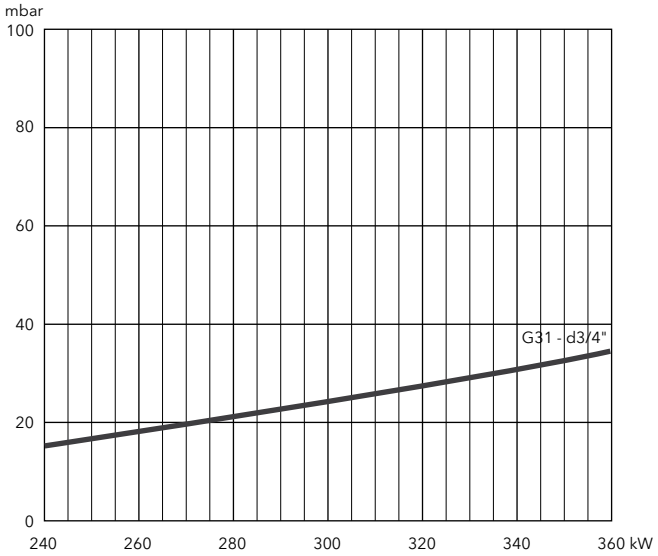

VG 4.460 V, VG 4.610 V

100 ... 610 kW
2 stage progressive/modulating pneumatic + fan speed control (Low NOx class 3)

- **Fuels:** natural gas (G20/G25, H_u = 8,83…10,35 kWh/m³);
  LPG (G31, H_u = 25,89 kWh/m³)
- **Emission class:** Low NOx class 3 (<80 mg/kWh) according to EN676
- **Operation:** two stage progressive or modulating with the installation of a power regulator and dedicated probes (see pag. 156)
- **Protection level:** IP 41

TECHNICAL DATA

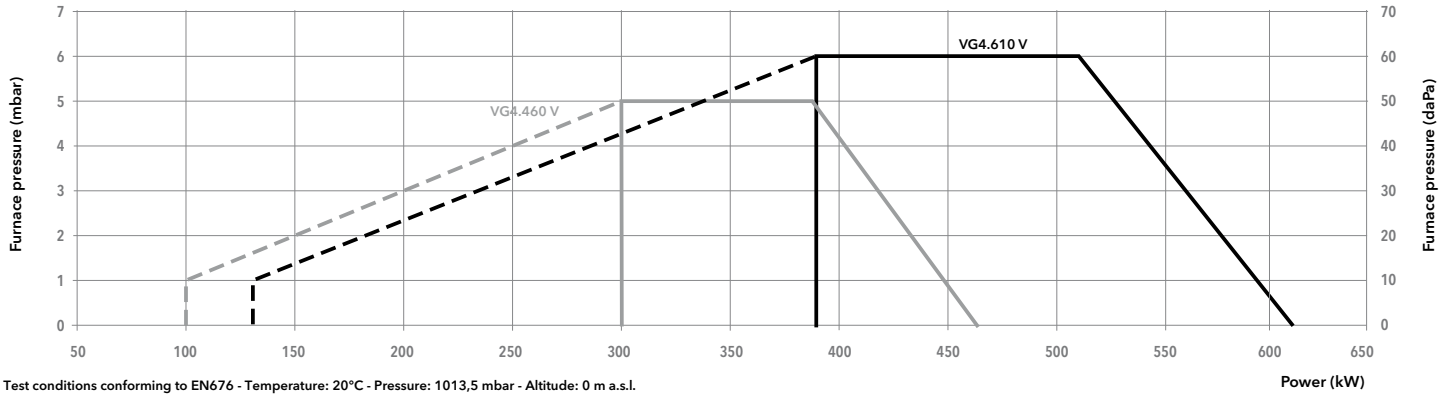

Test conditions conforming to EN676 - Temperature: 20°C - Pressure: 1013,5 mbar - Altitude: 0 m a.s.l.

Model		VG 4.460 V		VG 4.610 V	
Operation range		(100) 300 - 460 kW		(130) 390 - 610 kW	
Gas pressure		20 - 300 mbar		20 - 300 mbar	
Control box / flame detection		TCG5... / ionization		TCG5... / ionization	
Fan motor		230 V - 50 Hz - 420 W		230 V - 50 Hz - 750 W	
Electrical consumption		68 + 522 W		68 + 720 W	
Acoustic level (LpA)		70 dB(A)		71 dB(A)	
CE certificate		1312 CL 5412		1312 CL 5412	
Head lenght		KN	KL	KN	KL
Complete burner code	MB-VEF 420 d1"1/2-Rp2"	**3833887**	**3833888**	**3833875**	**3833876**
	MB-VEF 412 d1"1/4-Rp1"1/4	**3833891**	**3833892**	**3833879**	**3833880**
	MB-VEF 407 d3/4"-Rp1"	**3833895**	**3833896**	**3833883**	**3833884**

OTHER AVAILABLE VERSIONS

TC Version with tightness control

V_{ENT} Versions for continuous ventilation and post-ventilation

SCOPE OF SUPPLY

The burner is delivered in its package complete with:
- 1 burner head with flange seal and securing screws
- 1 compact gas train with gas filter; the gas filter is built-in for threaded valves (up to 2") and separated for flanged ones (DN65/80/100)
- 1 bag containing installation fittings
- 1 bag containing technical documentation (instruction manual, technical data, electrical diagram, exploded view and spare parts list)

Variatron MDE2 RTC LOW NOx CLASS 3

DIMENSIONS (mm)

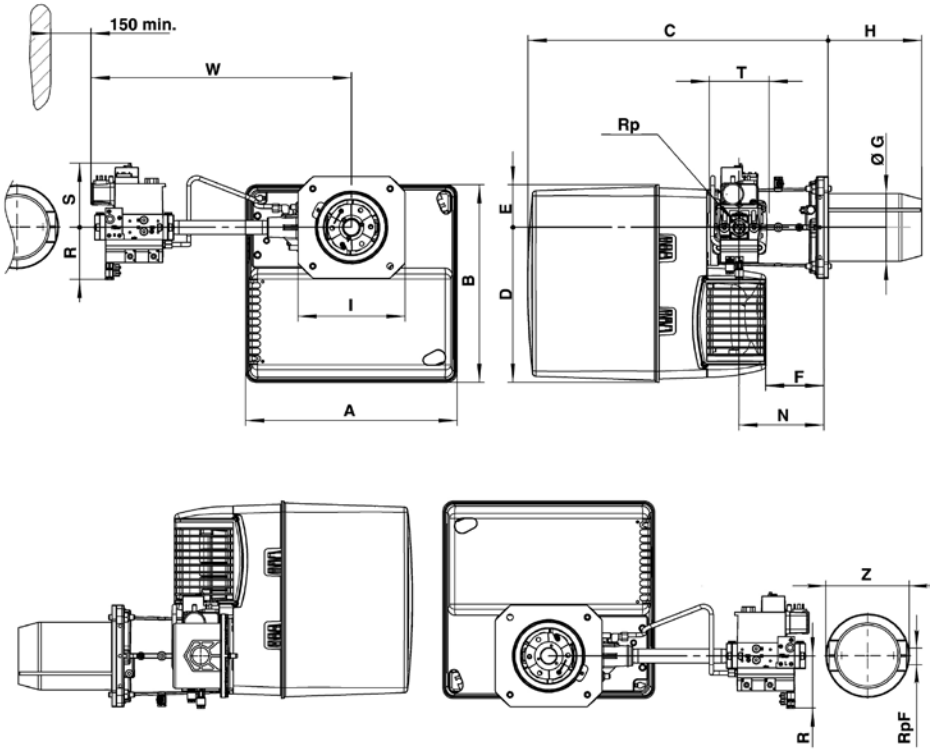

Gas train model	A	B	C	D	E	F	ØG	H		I	N	Rp	R	S	T	W	RpF	Z
								KN	KL									
d1"1/2-Rp2"	465	475	640	377	97	149	150	220	360	245	195	2"	100	185	100	613	-	-
d1"1/4-Rp1"1/4	465	475	640	377	97	149	150	220	360	245	195	1"1/4	80	175	145	536	-	-
d3/4"-Rp1"	465	475	640	377	97	149	150	220	360	245	195	1"	70	160	120	489	1"	160

Connecting flange

Øa (mm)	b (mm)	c	d
180-240	200-270	M10	45°

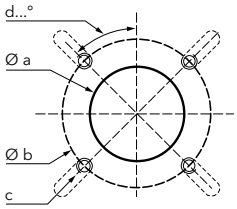

PACKAGING

The burner is delivered on a pallet in 3 packages containing:
- burner housing
- combustion head
- gas train and filter

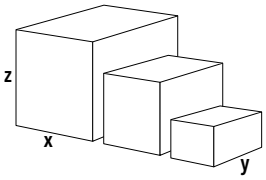

Component		Dimensions (mm)			Gross weight (kg)
		X	Y	Z	
Burner body	VG 4.460 V	490	490	590	28,6
	VG 4.610 V	490	490	590	32,7
Combustion head	KN	750	260	295	8,9
	KL	895	260	295	10,1
Gas train	d1"1/2-Rp2"	670	550	380	12
	d1"1/4-Rp1"1/4	600	400	240	11
	d3/4"-Rp1"	600	400	240	7

VG 4.460 V, VG 4.610 V

100 ... 610 kW
2 stage progressive/modulating pneumatic + fan speed control (Low NOx class 3)

PRESSURE LOSS [BURNER HEAD + GAS TRAIN] (mbar)

VG 4.460 V

Burner output (kW)	Natural gas G20 Hi = 10,35 kWh/m³		Natural gas G25 Hi = 8,83 kWh/m³			LPG G31 Hi = 25,89 kWh/m³	
	d3/4"-Rp1"	d1"1/4-Rp1"1/4	d3/4"-Rp1"	d1"1/4-Rp1"1/4	d1"1/2-Rp2"	d3/4"-Rp1"	d1"1/4-Rp1"1/4
300	40	8	59	11	6	18	8
350	54	10	81	15	9	24	11
400	70	14	106	19	12	31	14
450	89	17	134	24	15	40	18
510	114	22	172	31	19	51	23

Natural gas G20

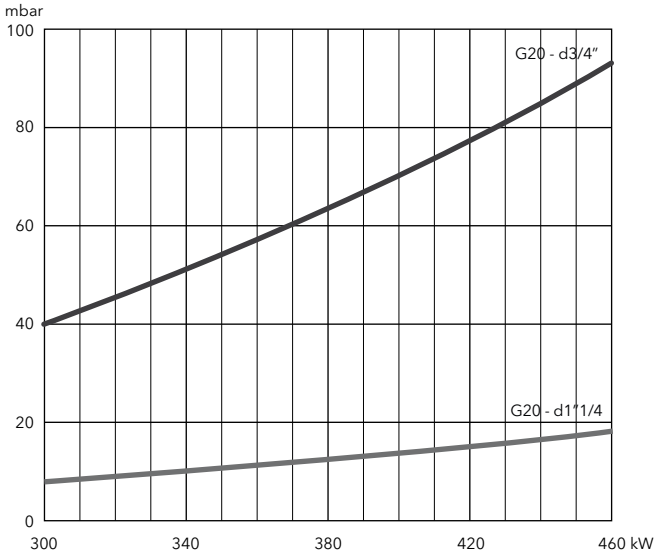

Natural gas G25

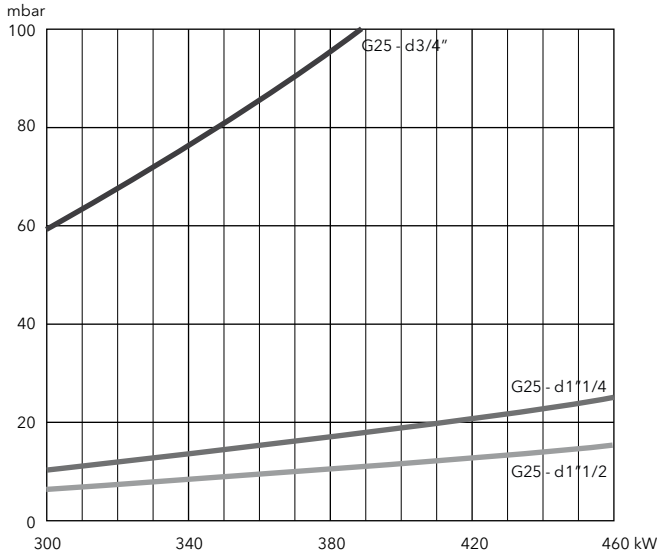

LPG

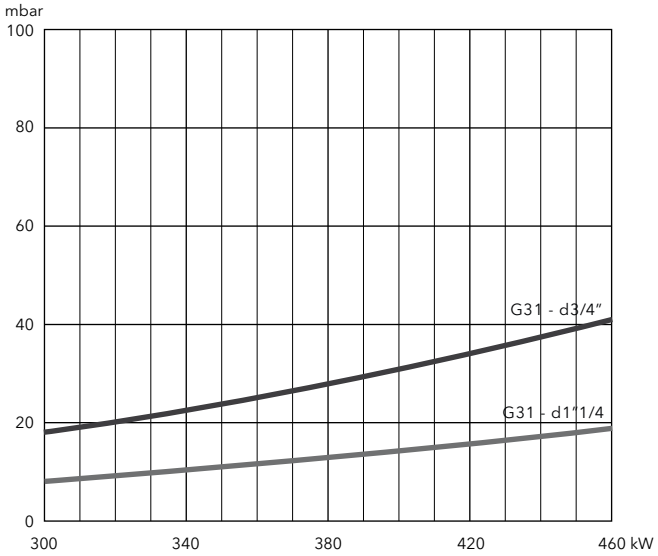

Variatron MDE2 RTC LOW NOx CLASS 3

PRESSURE LOSS [BURNER HEAD + GAS TRAIN] (mbar)

VG 4.610 V

Burner output (kW)	Natural gas G20 Hi = 10,35 kWh/m³			Natural gas G25 Hi = 8,83 kWh/m³			LPG G31 Hi= 25,89 kWh/m³	
	d3/4"-Rp1"	d1"1/4-Rp1"1/4	d1"1/2-Rp2"	d3/4"-Rp1"	d1"1/4-Rp1"1/4	d1"1/2-Rp2"	d3/4"-Rp1"	d1"1/4-Rp1"1/4
350	53	9	6	78	13	7	25	8
400	70	12	8	102	17	9	32	10
450	88	16	10	129	21	11	41	13
500	109	19	12	159	26	14	50	16
550	132	23	15	192	32	17	61	20
610	162	29	18	236	39	20	75	24

Natural gas G20

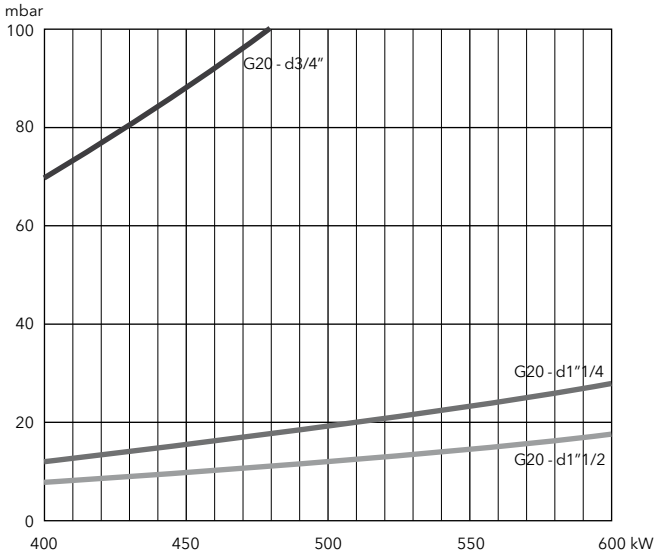

Natural gas G25

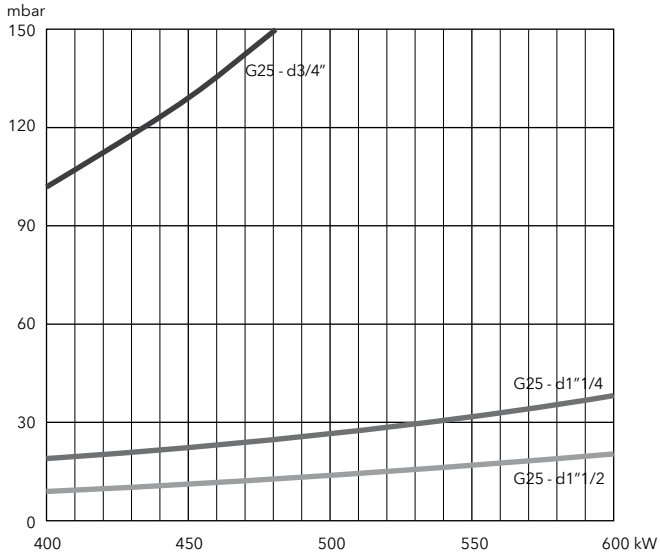

LPG

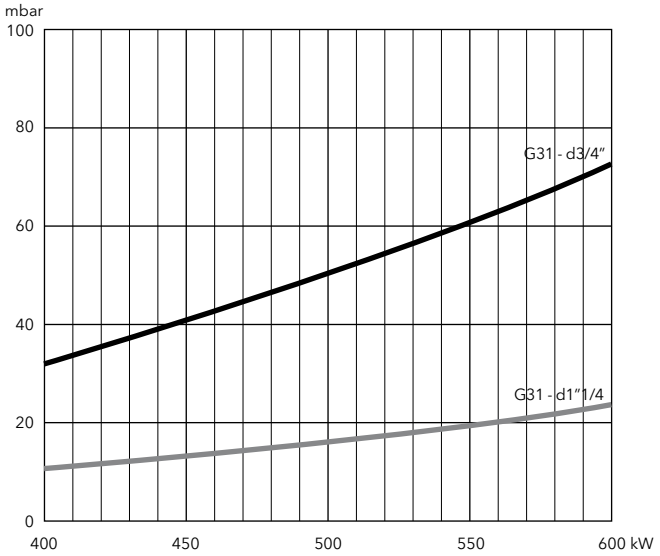

VG 2.120 M, VG 2.160 M, VG 2.210 M

30 ... 210 kW
2 stage progressive/modulating electronic (Low NOx class 3)

- **Fuels:** natural gas (G20/G25, H_u = 8,83…10,35 kWh/m³);
  LPG (G31, H_u = 25,89 kWh/m³)
- **Emission class:** Low NOx class 3 (<80 mg/kWh) according to EN676
- **Operation:** two stage progressive or modulating with the installation of a power regulator and dedicated probes (see pag. 156)
- **Protection level:** IP 21

TECHNICAL DATA

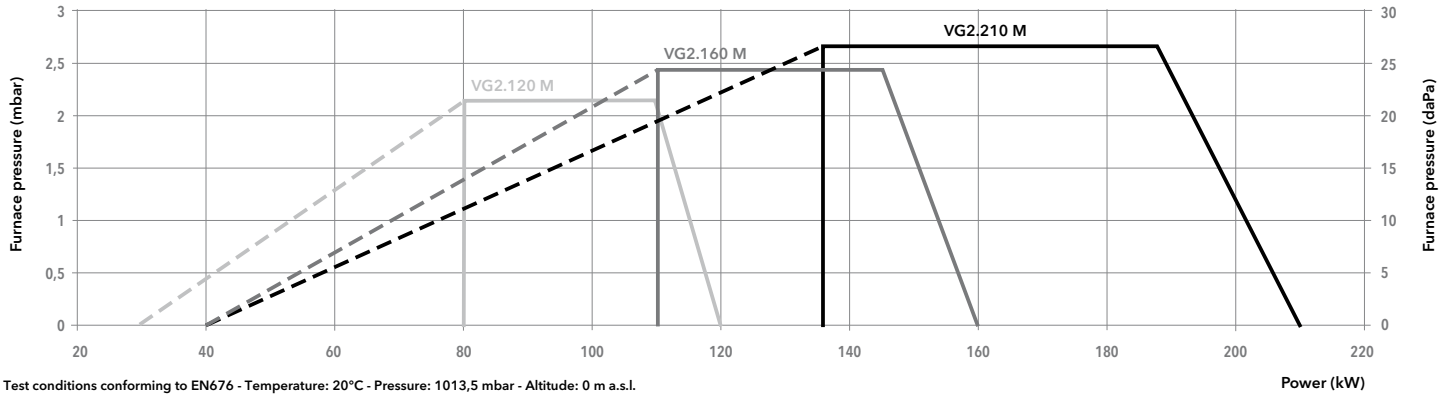

Test conditions conforming to EN676 - Temperature: 20°C - Pressure: 1013,5 mbar - Altitude: 0 m a.s.l.

Model		VG 2.120 M /TC		VG 2.160 M /TC		VG 2.210 M /TC	
Operation range		(30) 80 - 120 kW		(40) 110 - 160 kW		(40) 136 - 210 kW	
Gas pressure		20 - 300 mbar		20 - 300 mbar		20 - 300 mbar	
Control box / flame detection		BT3... / ionization		BT3... / ionization		BT3... / ionization	
Fan motor		230 V - 50 Hz - 100 W		230 V - 50 Hz - 100 W		230 V - 50 Hz - 130 W	
Electrical consumption		185 W		280 W		290 W	
Acoustic level (LpA)		62 dB(A)		64 dB(A)		65 dB(A)	
CE certificate		1312 BQ 4069		1312 BQ 4069		1312 BQ 4069	
Head lenght		KN	KL	KN	KL	KN	KL
Complete burner code	MBC300 d3/4"-Rp3/4"/TC	**3833520**	**3833523**	**3833521**	**3833524**	**3833522**	**3833525**

OTHER AVAILABLE VERSIONS

VENT Versions for continuous ventilation and post-ventilation

SCOPE OF SUPPLY

The burner is delivered in its package complete with:
- 1 gas connection flange
- 1 compact gas train with gas filter; the gas filter is built-in for threaded valves (up to 2") and separated for flanged ones (DN65/80/100)
- 1 burner flange with insulation
- 1 bag containing installation fittings
- 1 bag containing technical documentation (instruction manual, technical data, electrical diagram, exploded view and spare parts list)

GEM MDE2 RTC LOW NOx CLASS 3

DIMENSIONS (mm)

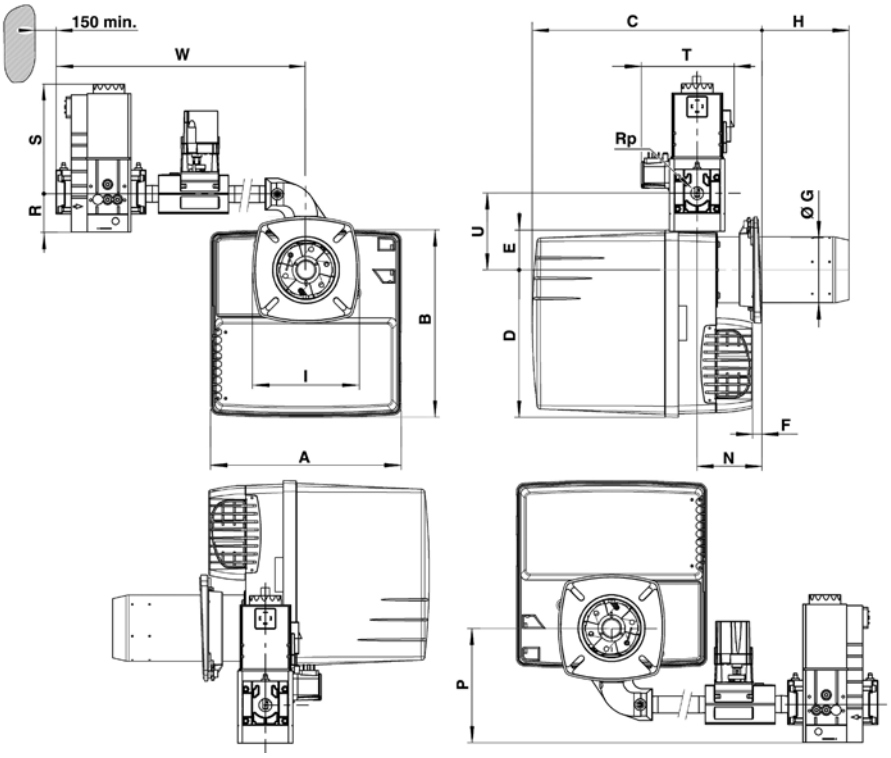

A	B	C		D	E	F min	ØG	H		I	N	P	Rp	R	S	T	U	W
		KN	KL					KN	KL									
331	325	398…518	398…638	256	69	15	115	30…150	30…270	185	30…150	193	3/4"	60	173	146	133	455

Connecting flange

Øa (mm)	b (mm)	c	d
120-135	150-184	M8	45°

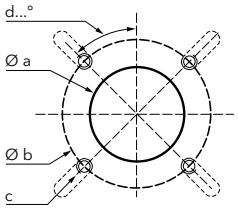

PACKAGING

The burner is delivered in 2 packages containing:
- burner housing and combustion head;
- gas train and filter.

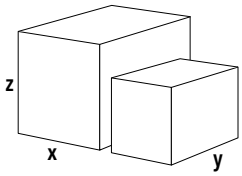

Component		Dimensions (mm)			Gross weight (kg)
		X	Y	Z	
Burner body	VG 2.120 M	400	440	520	21
	VG 2.160 M	400	440	520	21
	VG 2.210 M	400	440	520	21
Gas train	d3/4"-Rp3/4"/TC	540	670	380	12

VG 3.290 M, VG 3.360 M

50 ... 360 kW
2 stage progressive/modulating electronic (Low NOx class 3)

- **Fuels:** natural gas (G20/G25, H_u = 8,83…10,35 kWh/m³);
  LPG (G31, H_u = 25,89 kWh/m³)
- **Emission class:** Low NOx class 3 (<80 mg/kWh) according to EN676
- **Operation:** two stage progressive or modulating with the installation of a power regulator and dedicated probes (see pag. 156)
- **Protection level:** IP 41

TECHNICAL DATA

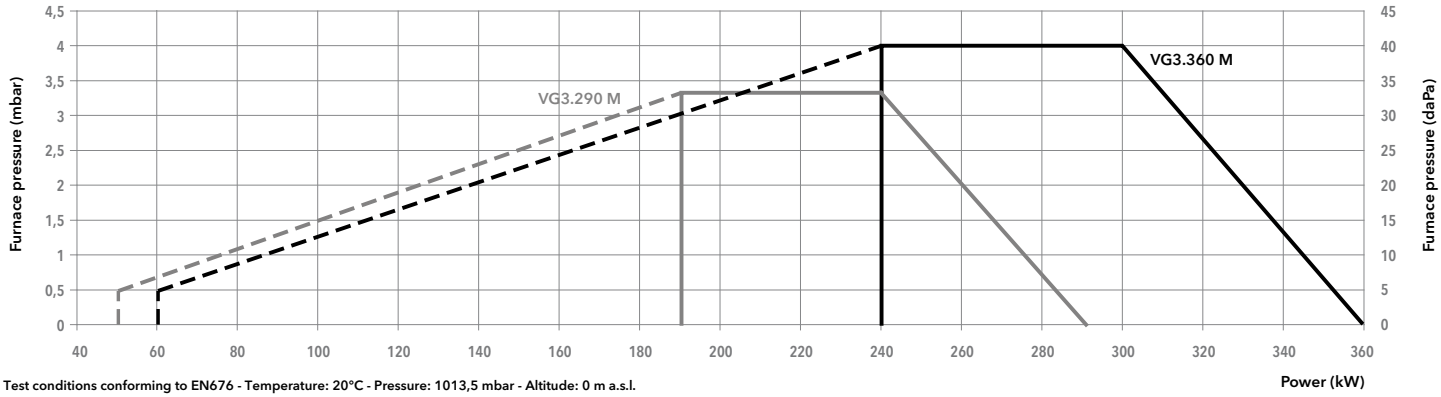

Test conditions conforming to EN676 - Temperature: 20°C - Pressure: 1013,5 mbar - Altitude: 0 m a.s.l.

Model		VG 3.290 M /TC		VG 3.360 M /TC	
Operation range		(50) 190 - 290 kW		(60) 240 - 360 kW	
Gas pressure		20 - 300 mbar		20 - 300 mbar	
Control box / flame detection		BT3... / ionization		BT3... / ionization	
Fan motor		230 V - 50 Hz - 250 W		230 V - 50 Hz - 300 W	
Electrical consumption		375 W		455 W	
Acoustic level (LpA)		67 dB(A)		69 dB(A)	
CE certificate		1312 BV 5208		1312 BV 5208	
Head lenght		KN	KL	KN	KL
Complete burner code	MBC700 d1"1/2-Rp1"1/2/TC	-	-	**3833652**	**3833653**
	MBC300 d3/4"-Rp1"1/4/TC	**3833648**	**3833649**	**3833650**	**3833651**

OTHER AVAILABLE VERSIONS

VENT Versions for continuous ventilation and post-ventilation

SCOPE OF SUPPLY

The burner is delivered in its package complete with:
- 1 burner head with flange seal and securing screws
- 1 compact gas train with gas filter; the gas filter is built-in for threaded valves (up to 2") and separated for flanged ones (DN65/80/100)
- 1 bag containing installation fittings
- 1 bag containing technical documentation (instruction manual, technical data, electrical diagram, exploded view and spare parts list)

GEM MDE2 RTC LOW NOx CLASS 3

DIMENSIONS (mm)

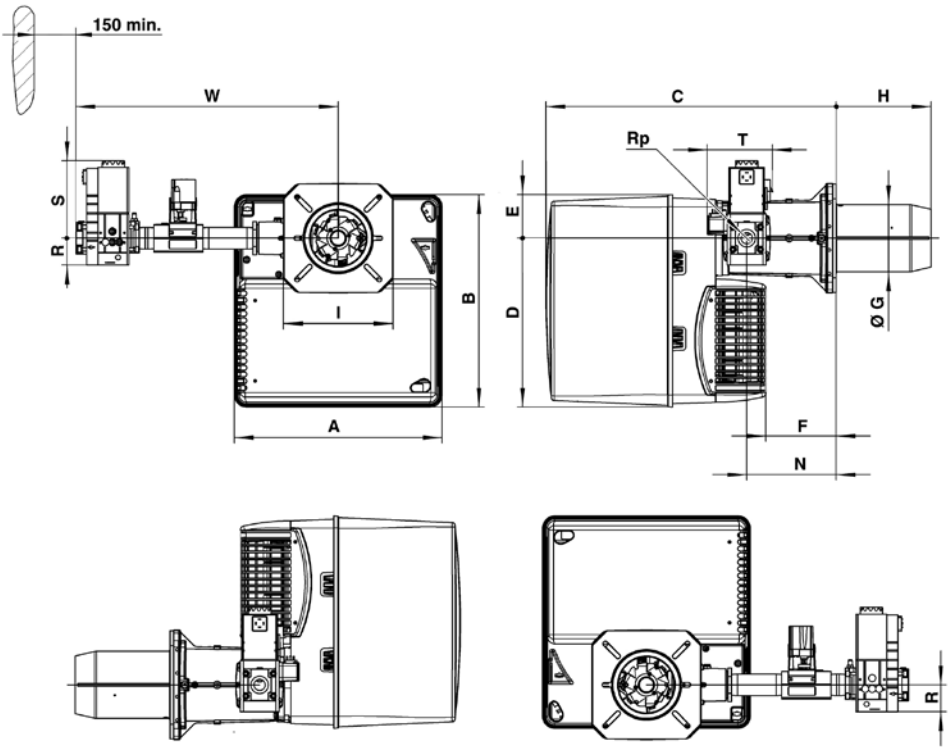

Gas train model	A	B	C	D	E	F	ØG	H		I	N	Rp	R	S	T	W
								KN	KL							
d1"1/2-Rp1"1/2/TC	406	379	576	297	82	120	130	180	320	195x205	170	1"1/2	80	185	160	638
d3/4"-Rp1"1/4/TC	406	379	576	297	82	120	130	180	320	195x205	170	1"1/4	60	173	146	577

Connecting flange

Øa (mm)	b (mm)	c	d
155-190	175-220	M10	45°

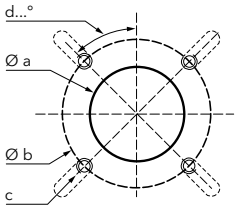

PACKAGING

The burner is delivered on a pallet in 3 packages containing:
- burner housing
- combustion head
- gas train and filter

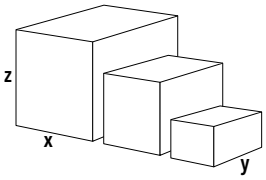

Component		Dimensions (mm)			Gross weight (kg)
		X	Y	Z	
Burner body	VG 3.290 M	440	400	520	21
	VG 3.360 M	440	400	520	22
Combustion head	KN	650	210	260	6
	KL	780	210	260	7
Gas train	d1"1/2-Rp1"1/2/TC	670	540	380	12
	d3/4"-Rp1"1/4/TC	670	540	380	12

VG 3.290 M, VG 3.360 M

50 ... 360 kW
2 stage progressive/modulating electronic (Low NOx class 3)

PRESSURE LOSS [BURNER HEAD + GAS TRAIN] (mbar)

VG 3.290 M

Burner output (kW)	Natural gas G20 Hi = 10,35 kWh/m³	Natural gas G25 Hi = 8,83 kWh/m³	LPG G31 Hi = 25,89 kWh/m³
	d3/4"-Rp1"1/4	d3/4"-Rp1"1/4	d3/4"-Rp1"1/4
190	8	8	12
210	9	10	15
230	11	12	18
250	13	14	21
270	15	17	24
290	18	19	28

Natural gas G20

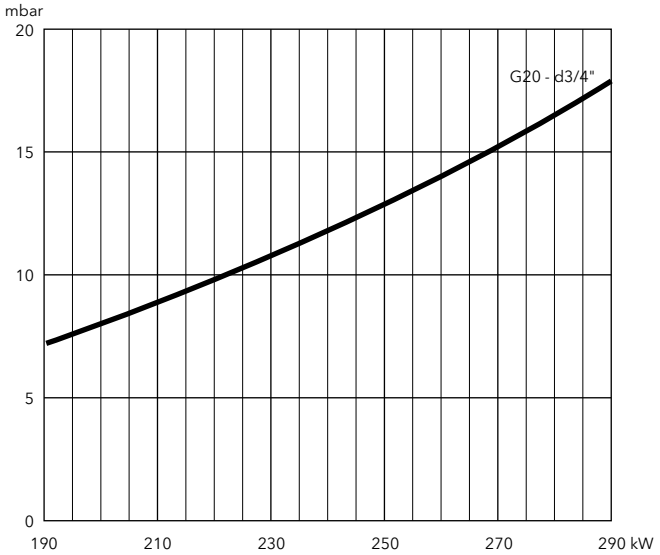

Natural gas G25

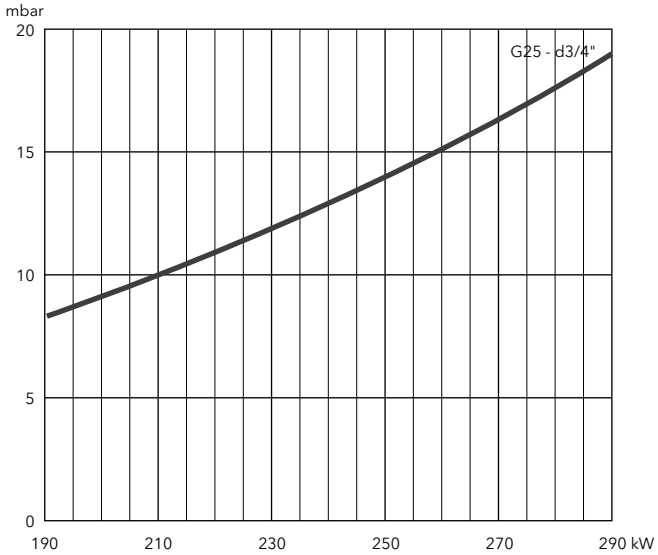

LPG

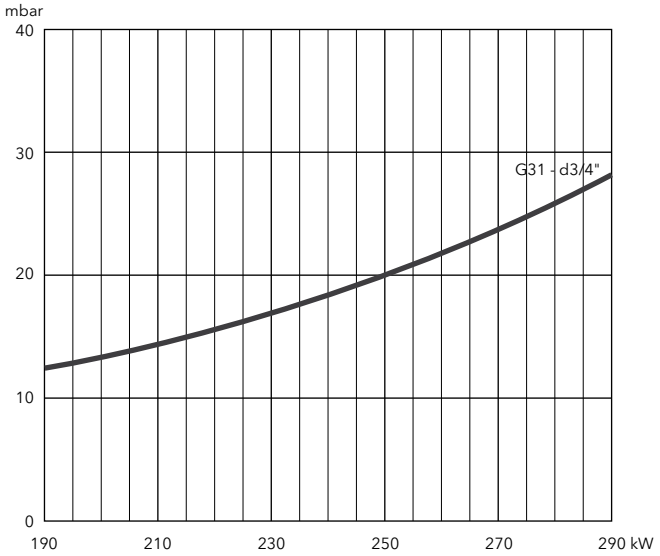

GEM MDE2 RTC LOW NOx CLASS 3

PRESSURE LOSS [BURNER HEAD + GAS TRAIN] (mbar)

VG 3.360 M

Burner output (kW)	Natural gas G20 Hi = 10,35 kWh/m³		Natural gas G25 Hi = 8,83 kWh/m³		LPG G31 Hi = 25,89 kWh/m³
	d3/4"-Rp1"1/4	d1"1/2-Rp1"1/2	d3/4"-Rp1"1/4	d1"1/2-Rp1"1/2	d3/4"-Rp1"1/4
240	12	9	14	9	13
280	16	12	19	12	17
320	21	15	24	15	22
360	26	19	31	19	28

Natural gas G20

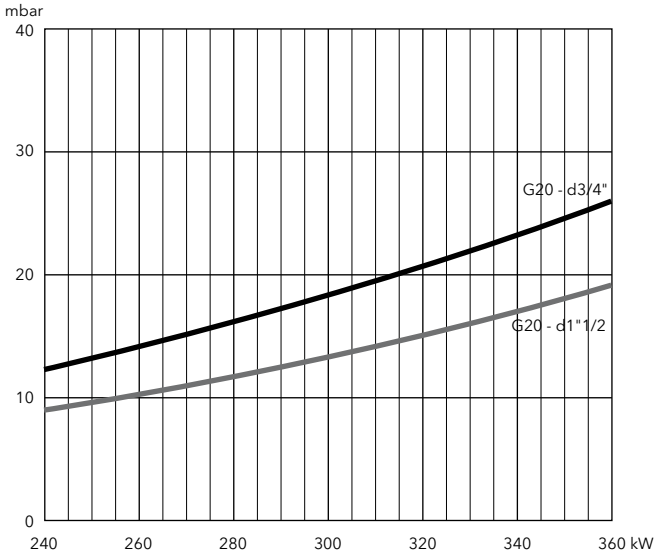

Natural gas G25

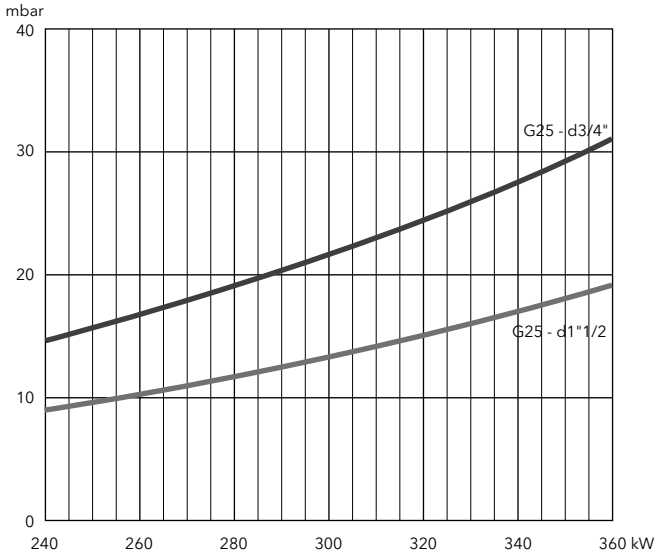

LPG

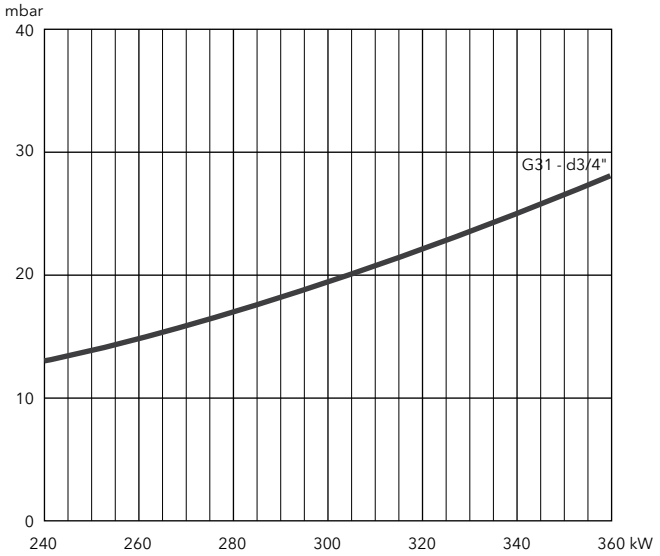

VG 4.460 M, VG 4.610 M

86 … 610 kW
2 stage progressive/modulating electronic (Low NOx class 3)

- **Fuels:** natural gas (G20/G25, H_u = 8,83…10,35 kWh/m³);
  LPG (G31, H_u = 25,89 kWh/m³)
- **Emission class:** Low NOx class 3 (<80 mg/kWh) according to EN676
- **Operation:** two stage progressive or modulating with the installation of a power regulator and dedicated probes (see pag. 156)
- **Protection level:** IP 41

TECHNICAL DATA

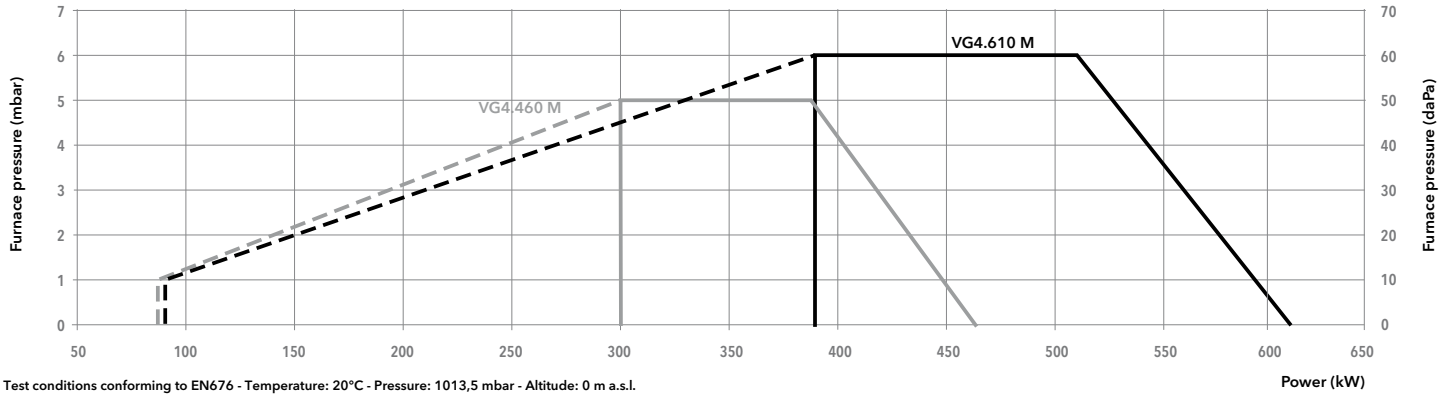

Test conditions conforming to EN676 - Temperature: 20°C - Pressure: 1013,5 mbar - Altitude: 0 m a.s.l.

Model		VG 4.460 M /TC		VG 4.610 M /TC	
Operation range		(86) 300 - 460		(90) 390 - 610 kW	
Gas pressure		20 - 300 mbar		20 - 300 mbar	
Control box / flame detection		BT3... / ionization		BT3... / ionization	
Fan motor		230 V - 50 Hz - 420 W		230 V - 50 Hz - 750 W	
Electrical consumption		510 W		760 W	
Acoustic level (LpA)		70 dB(A)		71 dB(A)	
CE certificate		0085 CN 0192		0085 CN 0192	
Head lenght		KN	KL	KN	KL
Complete burner code	MBC700 d1"1/2-Rp1"1/2/TC	**3833782**	**3833783**	**3833786**	**3833787**
	MBC300 d3/4"-Rp1"1/4/TC	**3833780**	**3833781**	**3833784**	**3833785**

OTHER AVAILABLE VERSIONS

VENT Versions for continuous ventilation and post-ventilation

SCOPE OF SUPPLY

The burner is delivered in its package complete with:
- 1 burner head with flange seal and securing screws
- 1 compact gas train with gas filter; the gas filter is built-in for threaded valves (up to 2") and separated for flanged ones (DN65/80/100)
- 1 bag containing installation fittings
- 1 bag containing technical documentation (instruction manual, technical data, electrical diagram, exploded view and spare parts list)

GEM MDE2 RTC LOW NOx CLASS 3

DIMENSIONS (mm)

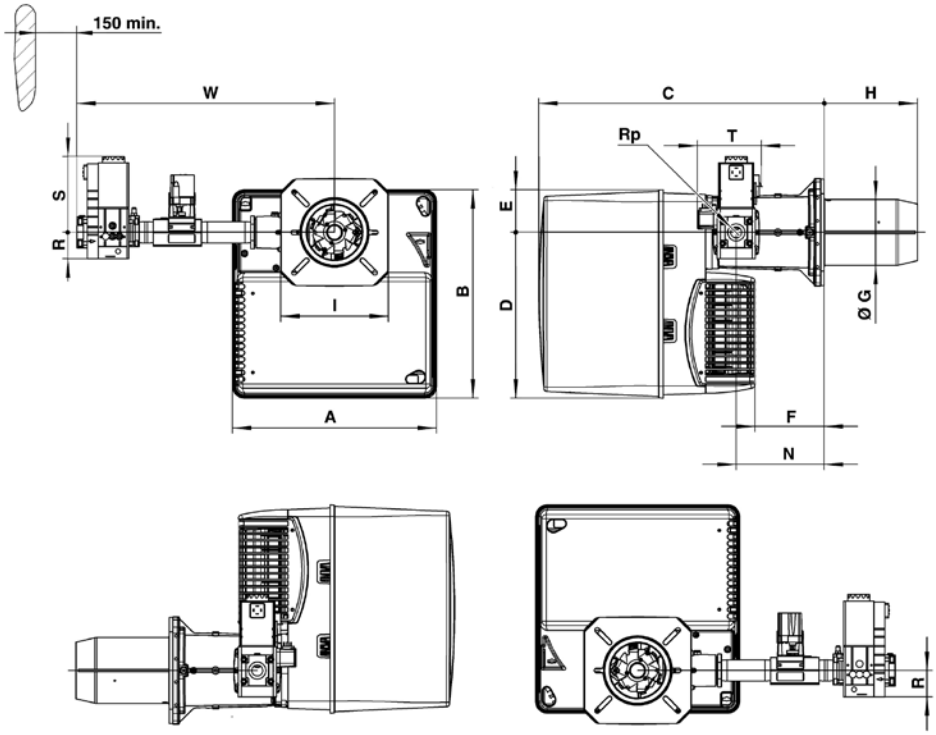

Gas train model	A	B	C	D	E	F	ØG	H		I	N	Rp	R	S	T	W
								KN	KL							
d1"1/2-Rp1"1/2/TC	465	475	640	377	97	149	150	220	360	245	195	1"1/2	80	185	160	649
d3/4"-Rp1"1/4/TC	465	475	640	377	97	149	150	220	360	245	195	1"1/4	60	173	146	587

Connecting flange

Øa (mm)	b (mm)	c	d
180-240	200-270	M10	45°

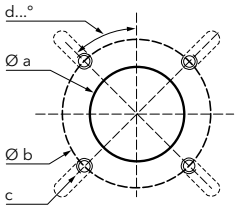

PACKAGING

The burner is delivered on a pallet in 3 packages containing:
- burner housing
- combustion head
- gas train and filter

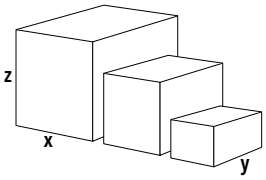

Component		Dimensions (mm)			Gross weight (kg)
		X	Y	Z	
Burner body	VG 4.460 M	490	490	590	28,6
	VG 4.610 M	490	490	590	32,7
Combustion head	KN	750	260	295	8,9
	KL	895	260	295	10,1
Gas train	d1"1/2-Rp1"1/2/TC	670	540	380	12
	d3/4"-Rp1"1/4/TC	670	540	380	12

VG 4.460 M, VG 4.610 M

86 ... 610 kW
2 stage progressive/modulating electronic (Low NOx class 3)

PRESSURE LOSS [BURNER HEAD + GAS TRAIN] (mbar)

VG 4.460 M

Burner output (kW)	Natural gas G20 Hi = 10,35 kWh/m³		Natural gas G25 Hi = 8,83 kWh/m³		LPG G31 Hi = 25,89 kWh/m³
	d3/4"-Rp1"1/4	d1"1/2-Rp1"1/2	d3/4"-Rp1"1/4	d1"1/2-Rp1"1/2	d3/4"-Rp1"1/4
300	15	6	20	8	10
350	19	7	27	10	13
400	24	8	34	12	16
450	30	10	43	15	19

Natural gas G20

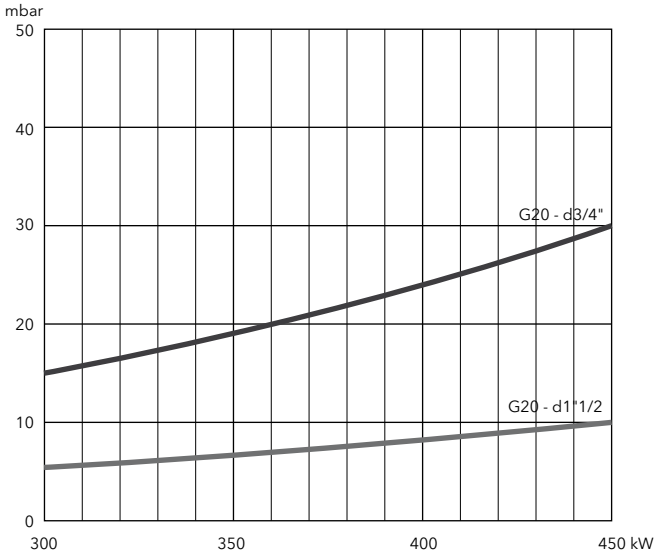

Natural gas G25

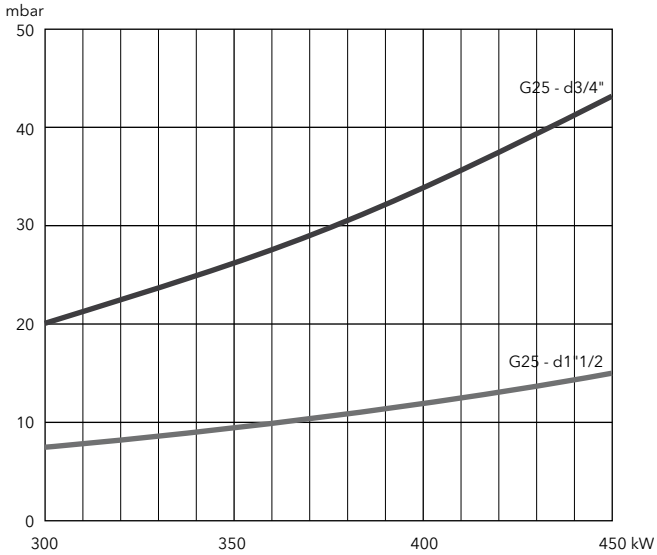

LPG

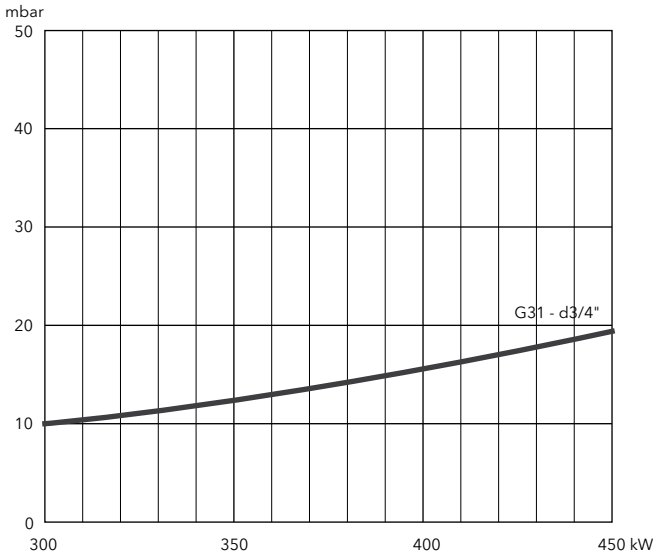

GEM MDE2 RTC LOW NOx CLASS 3

PRESSURE LOSS [BURNER HEAD + GAS TRAIN] (mbar)

VG 4.610 M

Burner output (kW)	Natural gas G20 Hi = 10,35 kWh/m³		Natural gas G25 Hi = 8,83 kWh/m³		LPG G31 Hi = 25,89 kWh/m³
	d3/4"-Rp1"1/4	d1"1/2-Rp1"1/2	d3/4"-Rp1"1/4	d1"1/2-Rp1"1/2	d3/4"-Rp1"1/4
400	23	8	32	10	13
450	29	10	40	12	15
500	35	12	50	15	18
550	42	14	61	18	21
600	50	16	73	22	25

Natural gas G20

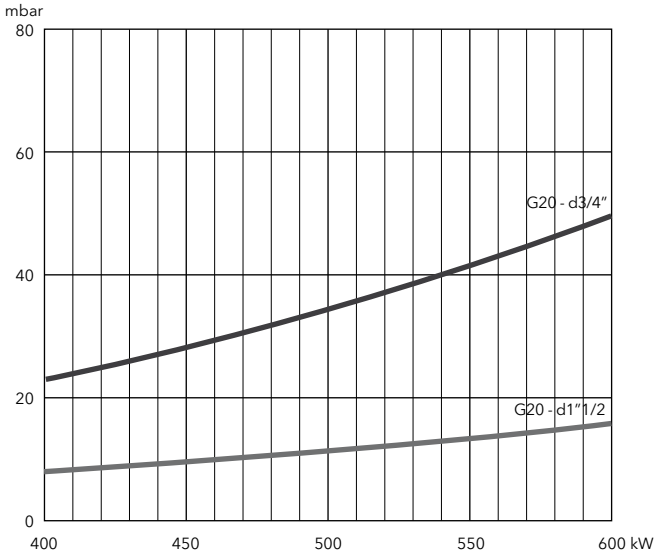

Natural gas G25

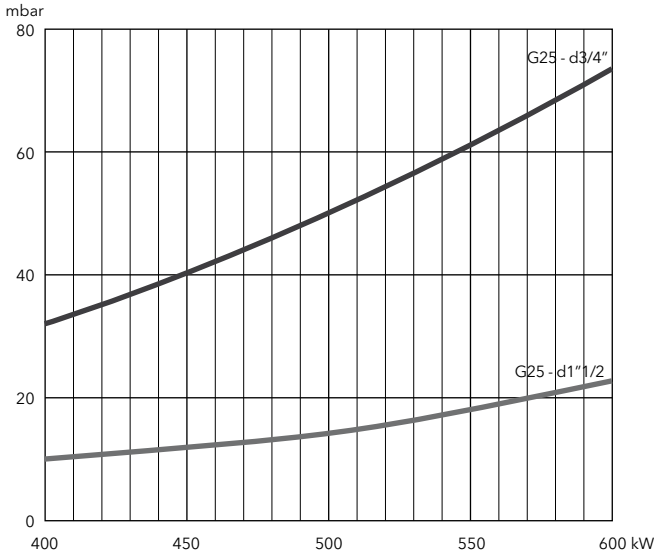

LPG

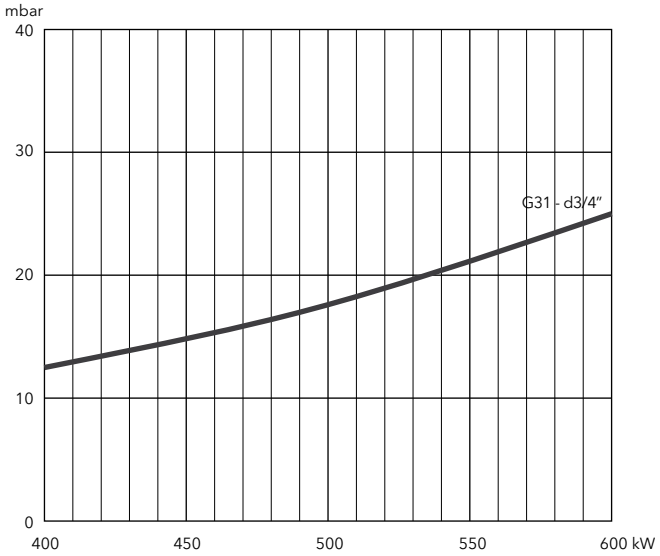

VG 5.950 M, VG 5.1200 M

160 ... 1160 kW
2 stage progressive/modulating electronic (Low NOx class 3)

- **Fuels:** natural gas (G20/G25, H_u = 8,83…10,35 kWh/m³);
  LPG (G31, H_u = 25,89 kWh/m³)
- **Emission class:** Low NOx class 3 (<80 mg/kWh) according to EN676
- **Operation:** two stage progressive or modulating with the installation of a power regulator and dedicated probes (see pag. 156)
- **Protection level:** IP 21

TECHNICAL DATA

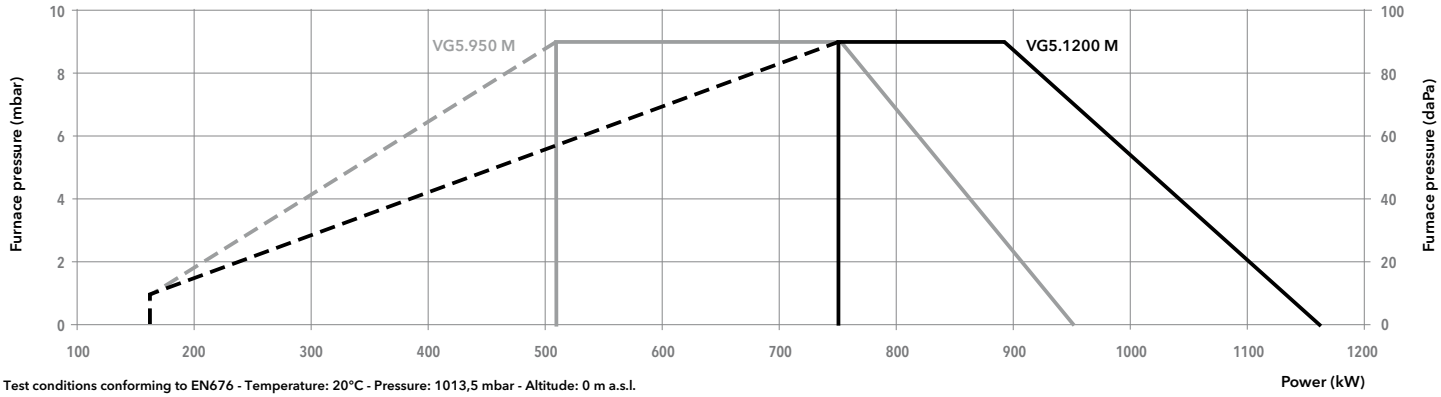

Test conditions conforming to EN676 - Temperature: 20°C - Pressure: 1013,5 mbar - Altitude: 0 m a.s.l.

Model			VG 5.950 M /TC			VG 5.1200 M /TC		
Operation range			(160) 510 - 950 kW			(160) 750 - 1160 kW		
Gas pressure			20 - 300 mbar			20 - 300 mbar		
Control box / flame detection			BT3... / ionization			BT3... / ionization		
Fan motor			230/400 V - 50 Hz - 1,5 kW			230/400 V - 50 Hz - 1,5 kW		
Electrical consumption			55 + 1750 W			55 + 2100 W		
Acoustic level (LpA)			77 dB(A)			77 dB(A)		
CE certificate			0085 CN 0192			0085 CN 0192		
Head lenght			KN	KL	KM	KN	KL	KM
Complete burner code	VGD40-065	s65-DN65/TC	**3833999**	**3834000**	**3834001**	**3834005**	**3834006**	**3834007**
	MBC1900	d65-DN65/TC	**3833996**	**3833997**	**3833998**	**3834002**	**3834003**	**3834004**
	MBC1200	d2"-Rp2"/TC	**3833803**	**3833804**	**3833805**	**3833809**	**3833810**	**3833811**
	MBC700	d1"1/2-Rp2"/TC	**3833800**	**3833801**	**3833802**	**3833806**	**3833807**	**3833808**
	MBC300	d3/4"-Rp1"1/4/TC	**3834099**	**3834100**	**3834101**	**3834102**	**3834103**	**3834104**

OTHER AVAILABLE VERSIONS

VENT Versions for continuous ventilation and post-ventilation

PED PED version for continuous operation

SCOPE OF SUPPLY

The burner is delivered in its package complete with:
- 1 burner head with flange seal and securing screws
- 1 compact gas train with gas filter; the gas filter is built-in for threaded valves (up to 2") and separated for flanged ones (DN65/80/100)
- 1 bag containing installation fittings
- 1 bag containing technical documentation (instruction manual, technical data, electrical diagram, exploded view and spare parts list)

GEM MDE2 RTC LOW NOx CLASS 3

DIMENSIONS (mm)

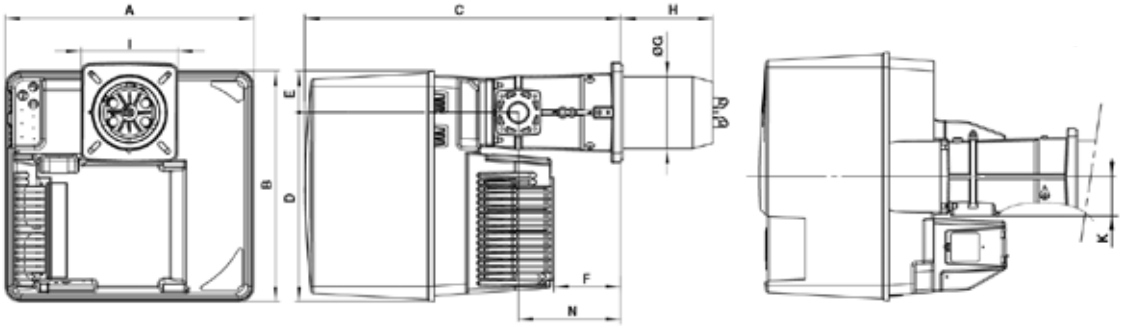

Connecting flange

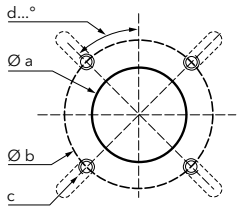

A	B	C	D	E	F	ØG	H			I	K	N
							KN	KM	KL			
581	549	752	450	99	164	170	215	325	435	230x238	89	244

Øa (mm)	b (mm)	c	d
195	220-260	M10	45°

Gas trains

Gas train "d":

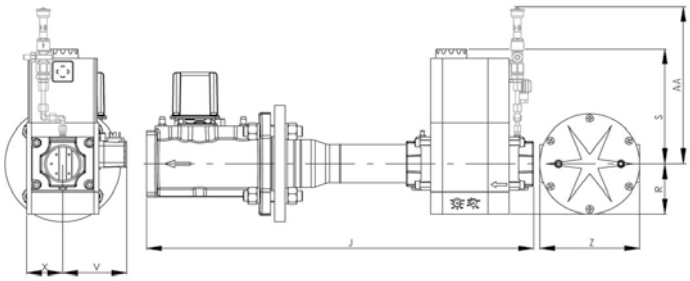

Model	J	R	S	V	X	Z	AA*
d65-DN65	490	183	245	110	98	290	385
d2"-Rp2"	700	96	330	125	81	-	385
d1"1/2-Rp2"	622	80	185	102	57	-	320
d3/4"-Rp1"1/4	460	60	173	88	58	-	320

Gas train "s":

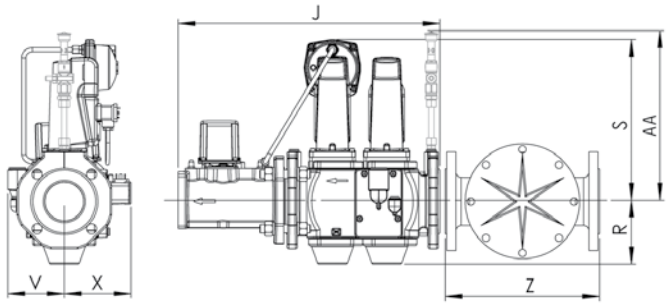

Model	J	R	S	V	X	Z	AA*
s65-DN65	490	118	300	106	126	290	365

***: for PED configuration**

PACKAGING

The burner is delivered on a pallet in 3 packages containing:

- burner housing
- combustion head
- gas train and filter

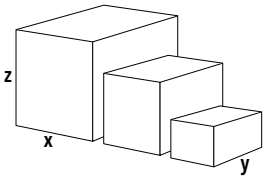

Component		Dimensions (mm)			Gross weight (kg)
		X	Y	Z	
Burner body	**VG 5.950 M**	800	600	850	56
	VG 5.1200 M	800	600	850	56
Combustion head	**KN**	780	265	280	12,3
	KL	1010	265	280	14,4
	KM	1010	265	280	13,4
Gas train	**s65-DN65/TC**	670	550	380	29
	d65-DN65/TC	670	550	380	33
	d2"-Rp2"/TC	670	550	380	22
	d1"1/2-Rp2"/TC	670	550	380	21
	d3/4"-Rp1"1/4/TC	670	550	380	12

VG 5.950 M, VG 5.1200 M

160 ... 1160 kW
2 stage progressive/modulating electronic (Low NOx class 3)

PRESSURE LOSS [BURNER HEAD + GAS TRAIN] (mbar)

VG 5.950 M

Burner output (kW)	Natural gas G20 Hi = 10,35 kWh/m³					Natural gas G25 Hi = 8,83 kWh/m³					LPG G31
	d3/4-Rp1"1/4	d1"1/2-Rp2"	d2"-Rp2"	d65-DN65	S65-DN65	d3/4-Rp1"1/4	d1"1/2-Rp2"	d2"-Rp2"	d65-DN65	s65-DN65	d1"1/2-Rp2"
500	31	9	8	5	5	37	11	9	5	6	6
600	43	13	10	8	8	53	16	12	7	9	8
700	58	17	13	10	10	73	21	15	10	12	10
800	76	22	16	13	13	96	28	19	13	16	13
900	97	27	19	17	17	124	35	23	17	20	16

Natural gas G20

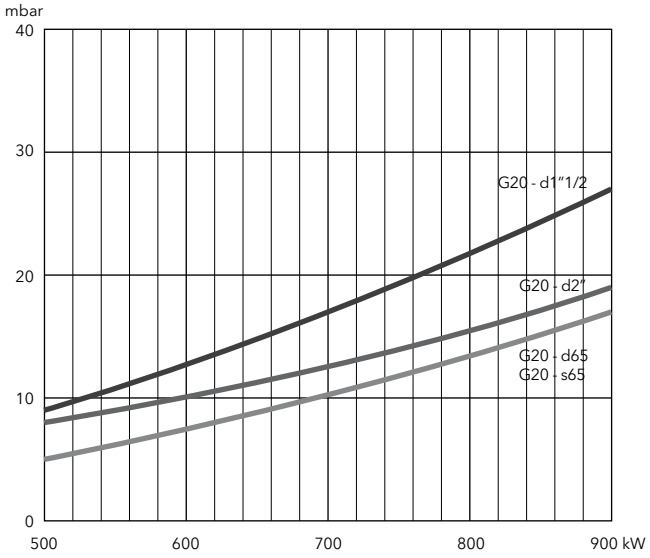

Natural gas G25

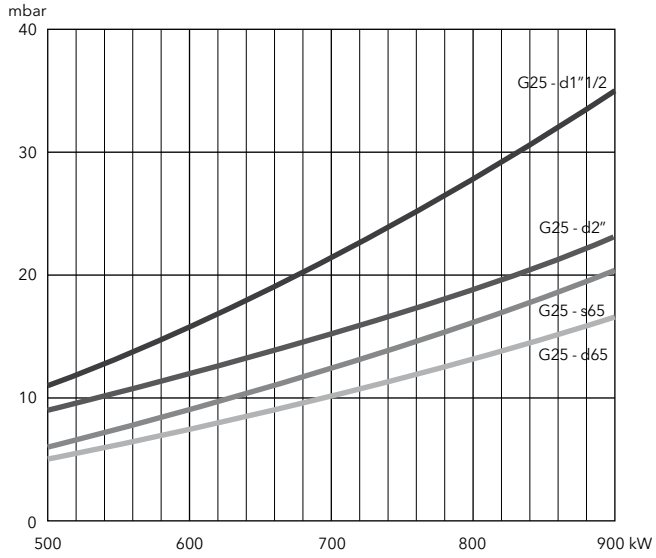

Natural gas G20, G25

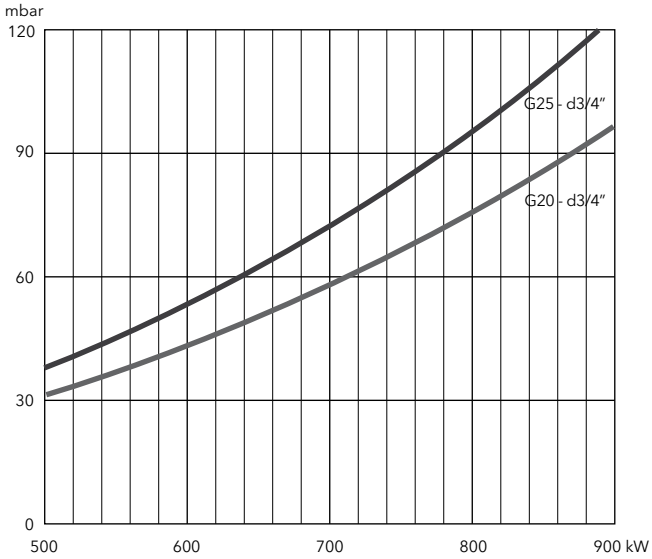

LPG

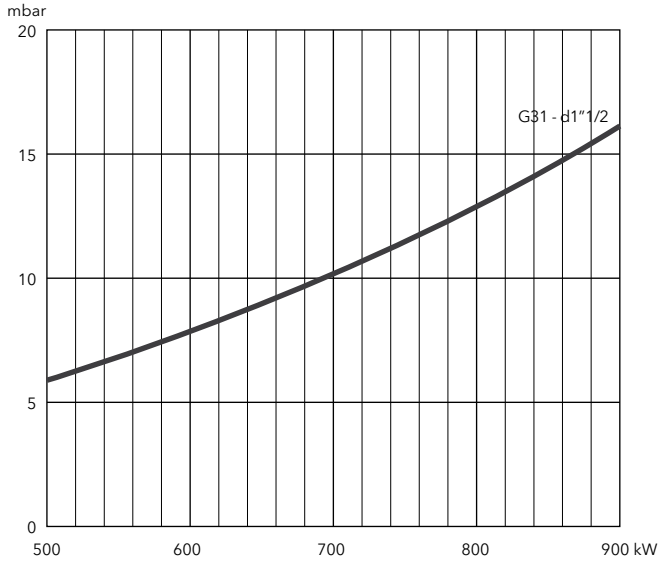

GEM MDE2 RTC LOW NOx CLASS 3

PRESSURE LOSS [BURNER HEAD + GAS TRAIN] (mbar)

VG 5.1200 M

Burner output (kW)	Natural gas G20 Hi = 10,35 kWh/m³					Natural gas G25 Hi = 8,83 kWh/m³					LPG G31
	d3/4-Rp1"1/4	d1"1/2-Rp2"	d2"-Rp2"	d65-DN65	s65-DN65	d3/4-Rp1"1/4	d1"1/2-Rp2"	d2"-Rp2"	d65-DN65	s65-DN65	d1"1/2-Rp2"
700	40	16	12	10	10	60	21	14	10	12	10
800	53	20	14	13	13	79	27	17	13	15	12
900	68	25	17	16	16	100	34	21	16	19	15
1000	84	31	21	20	20	126	42	26	20	24	18
1100	103	37	25	24	24	154	50	31	24	29	22
1200	123	44	29	29	29	186	59	36	29	34	26

Natural gas G20

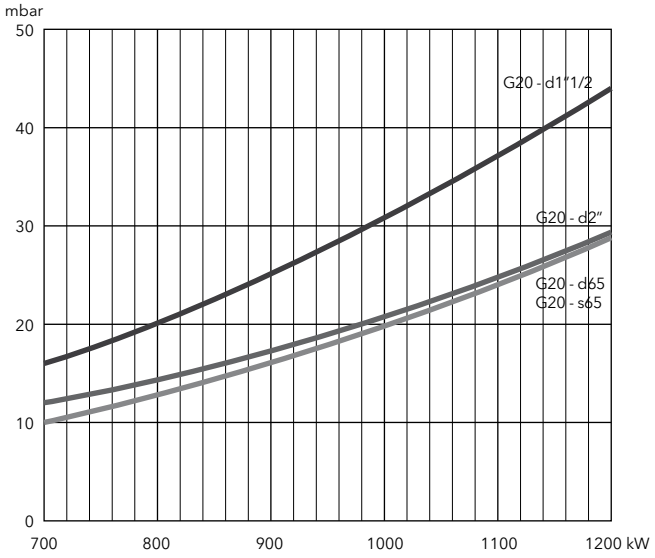

Natural gas G25

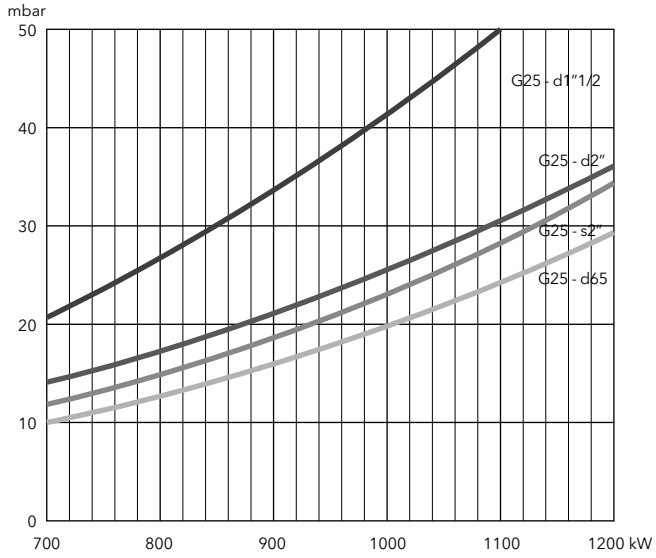

Natural gas G20, G25

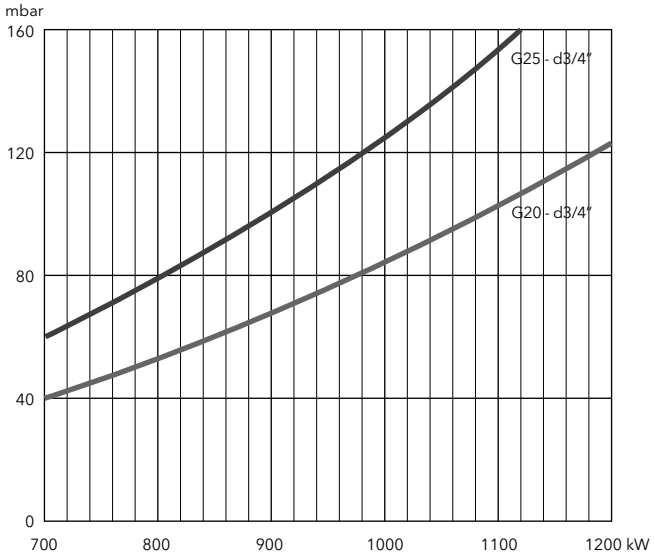

LPG

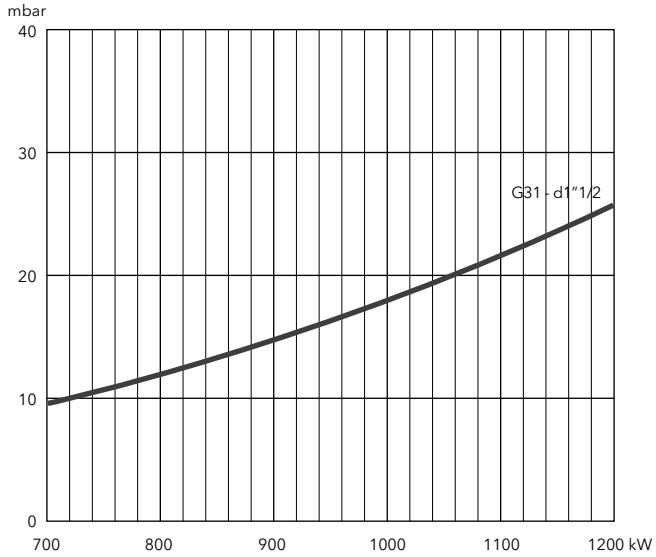

VG 6.1600 M, VG 6.2100 M

240 ... 1900 kW
2 stage progressive/modulating electronic (Low NOx class 3)

- **Fuels:** natural gas (G20/G25, H_u = 8,83…10,35 kWh/m³);
  LPG (G31, H_u = 25,89 kWh/m³)
- **Emission class:** Low NOx class 3 (<80 mg/kWh) according to EN676
- **Operation:** two stage progressive or modulating with the installation of a power regulator and dedicated probes (see pag. 156)
- **Protection level:** IP 21

TECHNICAL DATA

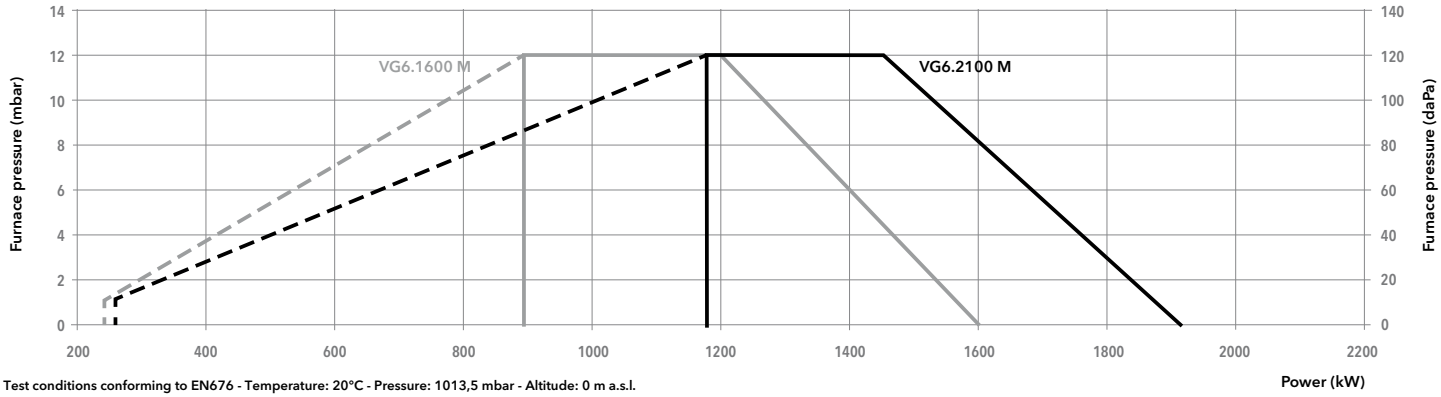

Test conditions conforming to EN676 - Temperature: 20°C - Pressure: 1013,5 mbar - Altitude: 0 m a.s.l.

Model			VG 6.1600 M /TC			VG 6.2100 M /TC		
Operation range			(240) 890 - 1600 kW			(260) 1180 - 1900 kW		
Gas pressure			20 - 300 mbar			20 - 300 mbar		
Control box / flame detection			BT3... / ionization			BT3... / ionization		
Fan motor			230/400 V - 50 Hz - 2,2 kW			230/400 V - 50 Hz - 2,7 kW		
Electrical consumption			55 + 2600 W			55 + 3400 W		
Acoustic level (LpA)			77,2 dB(A)			79 dB(A)		
CE certificate			0085 CN 0192			0085 CN 0192		
Head lenght			KN	KL	KM	KN	KL	KM
Complete burner code	VGD 40-065	s65-DN65/TC	**3833938**	**3833939**	**3833940**	**3833934**	**3833933**	**3833930**
	MBC1900	d65-DN65/TC	**3833836**	**3833837**	**3833838**	**3833845**	**3833846**	**3833847**
	MBC1200	d2"-Rp2"/TC	**3833833**	**3833834**	**3833835**	**3833842**	**3833843**	**3833844**
	MBC700	d1"1/2-Rp2"/TC	**3833830**	**3833831**	**3833832**	**3833839**	**3833840**	**3833841**

OTHER AVAILABLE VERSIONS

VENT Versions for continuous ventilation and post-ventilation

PED PED version for continuous operation

SCOPE OF SUPPLY

The burner is delivered in its package complete with:
- 1 burner head with flange seal and securing screws
- 1 compact gas train with gas filter; the gas filter is built-in for threaded valves (up to 2") and separated for flanged ones (DN65/80/100)
- 1 bag containing installation fittings
- 1 bag containing technical documentation (instruction manual, technical data, electrical diagram, exploded view and spare parts list)

GEM MDE2 RTC LOW NOx CLASS 3

DIMENSIONS (mm)

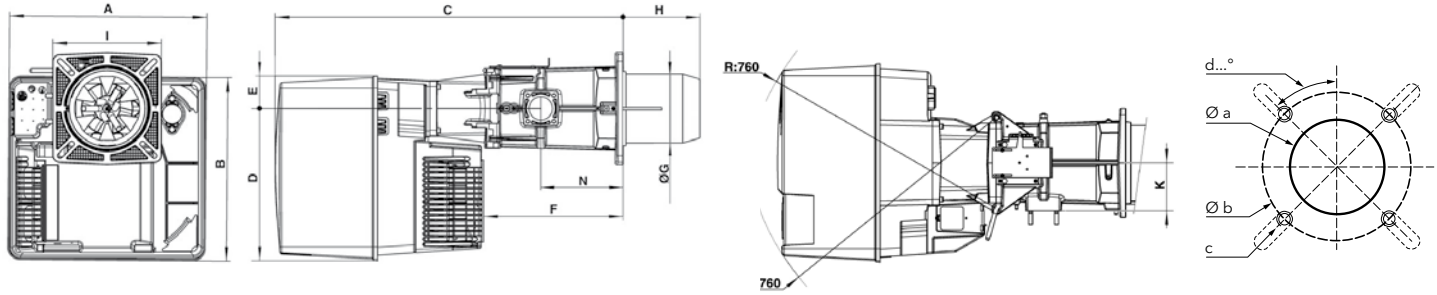

A	B	C	D	E	F	ØG	H			I	K	N
							KN	KM	KL			
592	553	1050	456	97	421	227	360	460	560	326x335	144	247

Øa (mm)	b (mm)	c	d
250	300-400	M12	45°

Gas trains

Gas train "d":

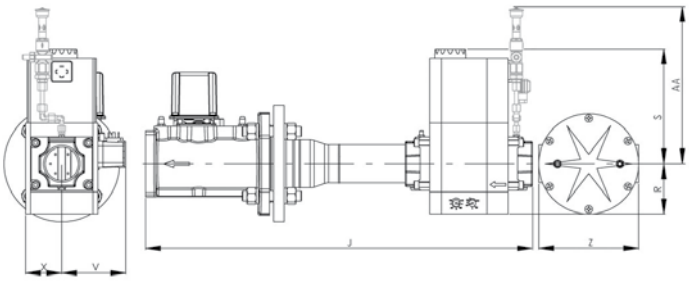

Model	J	R	S	V	X	Z	AA*
d65-DN65	490	183	245	110	98	290	385
d2"-Rp2"	700	96	330	125	81	-	385
d1"1/2-Rp2"	622	80	185	102	57	-	320

Gas train "s":

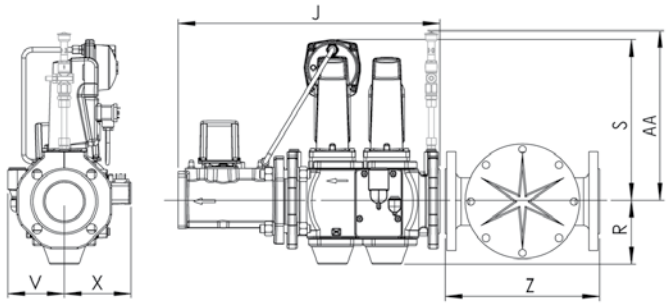

Model	J	R	S	V	X	Z	AA*
s65-DN65	490	118	300	106	126	290	365

***: for PED configuration**

PACKAGING

The burner is delivered on a pallet in 3 packages containing:

- burner housing
- combustion head
- gas train and filter

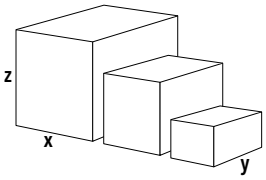

Component		Dimensions (mm)			Gross weight (kg)
		X	Y	Z	
Burner body	**VG 6.1600 M**	800	600	850	56
	VG 6.2100 M	800	600	850	56
Combustion head	**KN**	1000	380	420	26,7
	KL	1100	380	430	29,4
	KM	1100	380	430	28
Gas train	**s65-DN65/TC**	790	600	500	29,4
	d65-DN65/TC	670	550	380	33
	d2"-Rp2"/TC	670	550	380	22
	d1"1/2-Rp2"/TC	670	550	380	21

VG 6.1600 M, VG 6.2100 M

240 ... 1900 kW
2 stage progressive/modulating electronic (Low NOx class 3)

PRESSURE LOSS [BURNER HEAD + GAS TRAIN] (mbar)

VG 6.1600 M

Burner output (kW)	Natural gas G20 Hi = 10,35 kWh/m³				Natural gas G25 Hi = 8,83 kWh/m³				LPG G31 Hi = 25,89 kWh/m³
	d1"1/2-Rp2"	d2"-Rp2"	d65-DN65	s65-DN65	d1"1/2-Rp2"	d2"-Rp2"	d65-DN65	s65-DN65	d1"1/2-Rp2"
800	16	9	6	6	22	12	8	8	8
1000	25	13	10	9	34	18	12	12	12
1200	35	18	14	13	48	24	18	18	17
1400	47	24	19	18	64	32	24	24	22
1600	61	31	25	23	83	42	31	31	29

Natural gas G20

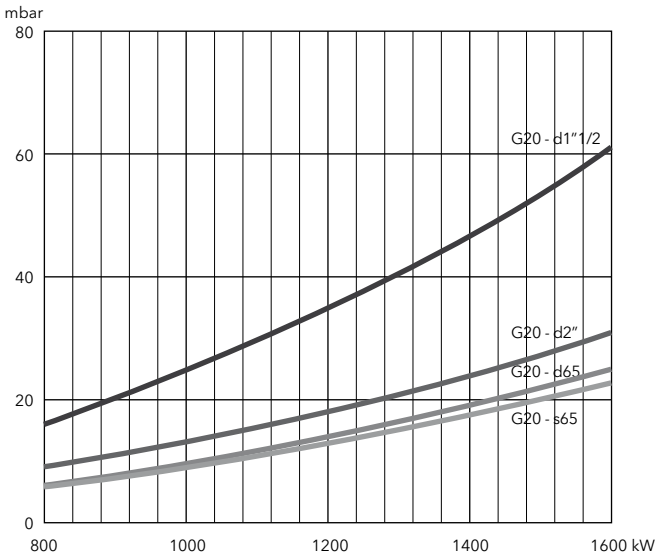

Natural gas G25

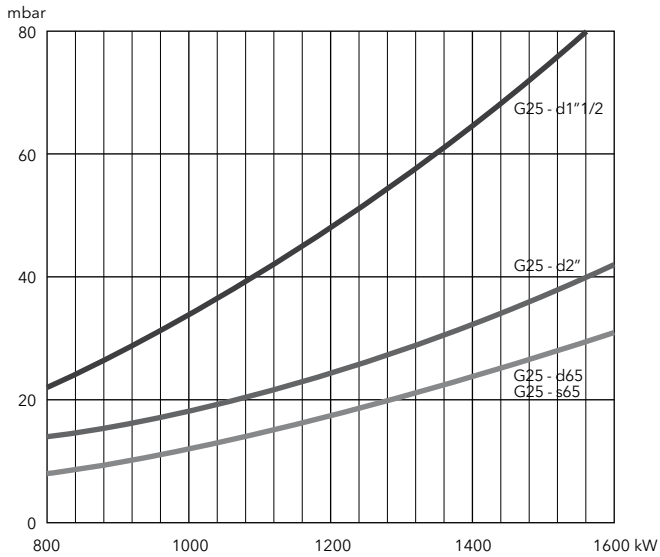

LPG

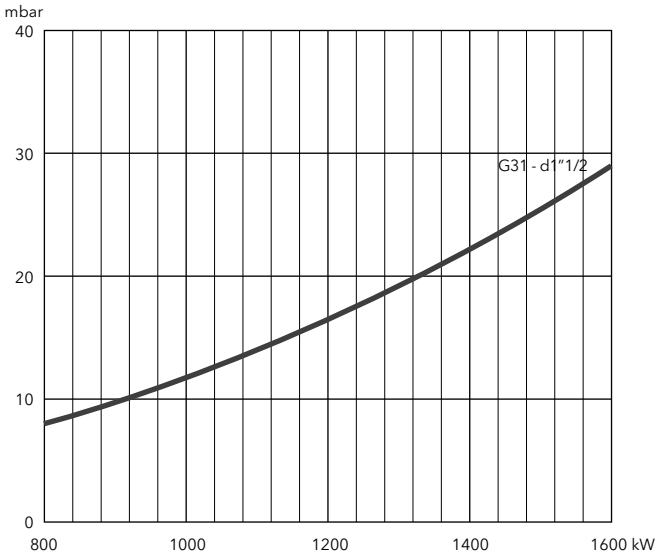

GEM MDE2 RTC LOW NOx CLASS 3

PRESSURE LOSS [BURNER HEAD + GAS TRAIN] (mbar)

VG 6.2100 M

Burner output (kW)	Natural gas G20 Hi = 10,35 kWh/m³				Natural gas G25 Hi = 8,83 kWh/m³				LPG G31 Hi = 25,89 kWh/m³	
	d1"1/2-Rp2"	d2"-Rp2"	d65-DN65	s65-DN65	d1"1/2-Rp2"	d2"-Rp2"	d65-DN65	s65-DN65	d1"1/2-Rp2"	d2"-Rp2"
1100	28	15	12	11	39	21	15	15	13	9
1300	39	21	16	16	54	29	21	22	18	11
1500	51	27	21	21	71	37	28	29	23	14
1700	64	34	27	27	91	47	36	37	29	17
1900	80	41	34	34	114	59	45	46	36	20

Natural gas G20

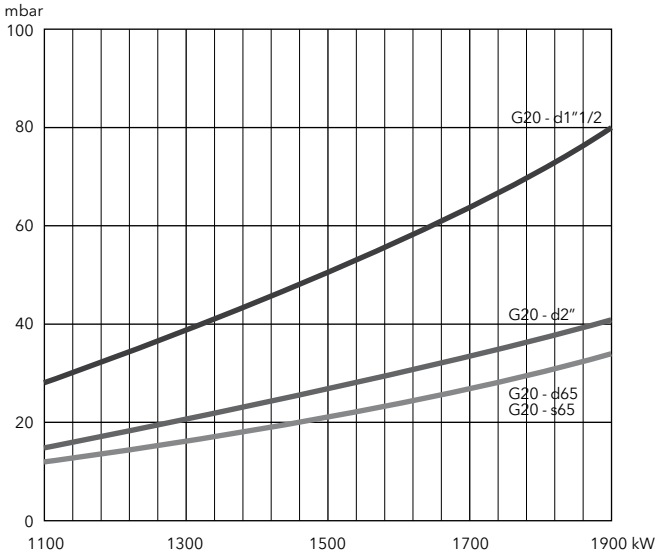

Natural gas G25

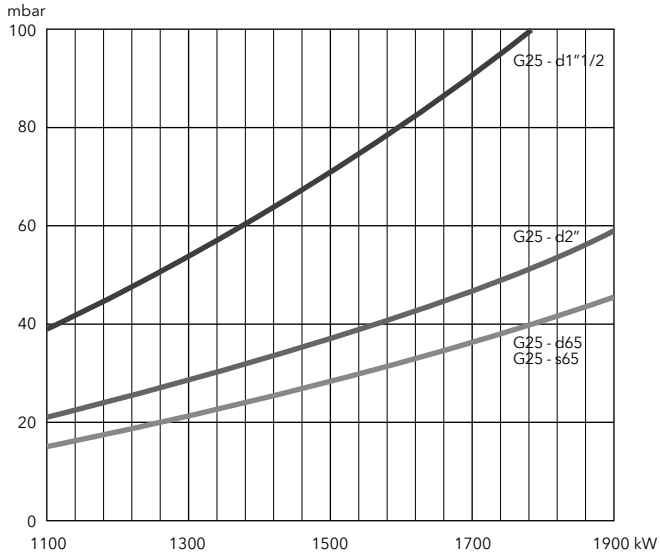

LPG

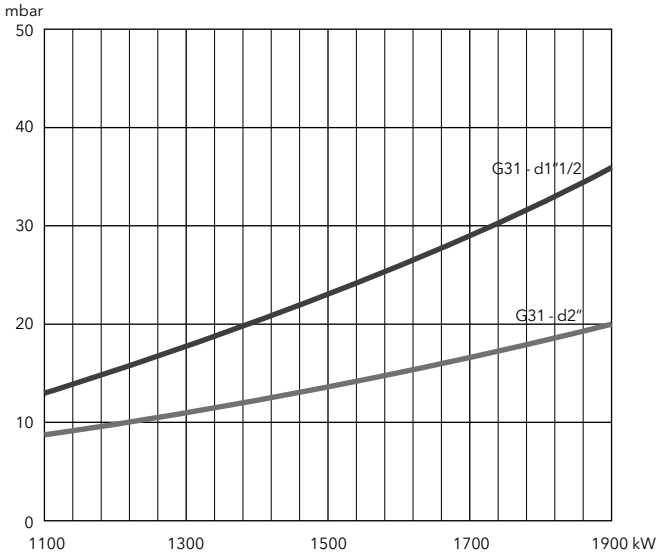

VG 5.950 M V, VG 5.1200 M V

160 ... 1160 kW
2 stage progressive/modulating electronic (Low NOx class 3) + fan speed control

- **Fuels:** natural gas (G20/G25, H_u = 8,83…10,35 kWh/m³);
  LPG (G31, H_u = 25,89 kWh/m³)
- **Emission class:** Low NOx class 3 (<80 mg/kWh) according to EN676
- **Operation:** two stage progressive or modulating with the installation of a power regulator and dedicated probes (see pag. 156)
- **Protection level:** IP 21

TECHNICAL DATA

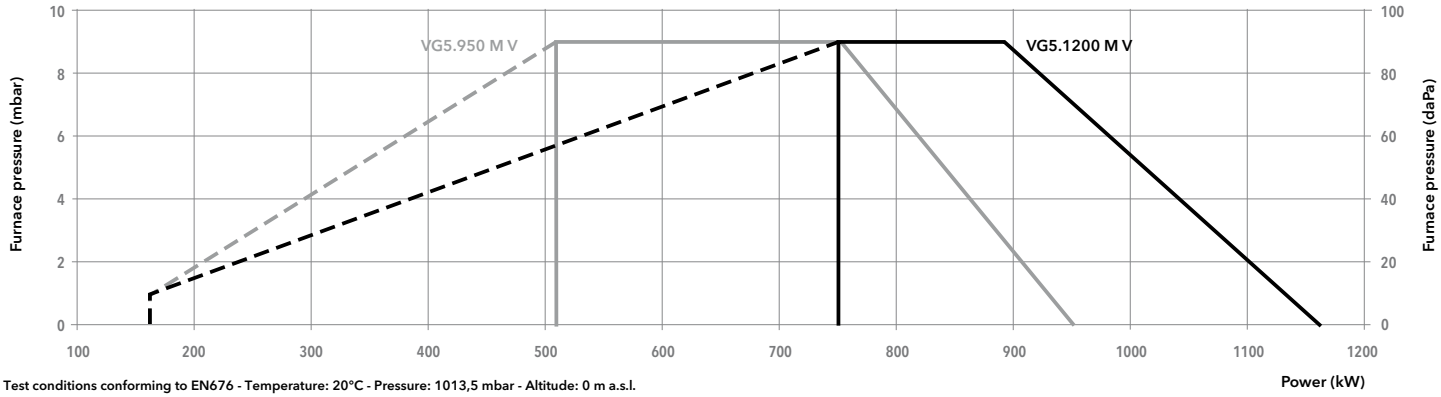

Test conditions conforming to EN676 - Temperature: 20°C - Pressure: 1013,5 mbar - Altitude: 0 m a.s.l.

Model			VG 5.950 M V /TC			VG 5.1200 M V /TC		
Operation range			(160) 510 - 950 kW			(160) 750 - 1160 kW		
Gas pressure			20 - 300 mbar			20 - 300 mbar		
Control box / flame detection			BT3... / ionization			BT3... / ionization		
Fan motor			230/400 V - 50 Hz - 1,5 kW			230/400 V - 50 Hz - 1,5 kW		
Electrical consumption			55 + 1750 W			55 + 2100 W		
Acoustic level (LpA)			77 dB(A)			77 dB(A)		
CE certificate			0085 CN 0192			0085 CN 0192		
Head lenght			KN	KL	KM	KN	KL	KM
Complete burner code	VGD40-065	s65-DN65/TC	**3835235**	**3835245**	**3835255**	**3835240**	**3835250**	**3835260**
	MBC1900	d65-DN65/TC	**3835236**	**3835246**	**3835256**	**3835241**	**3835251**	**3835261**
	MBC1200	d2"-Rp2"/TC	**3835237**	**3835247**	**3835257**	**3835242**	**3835252**	**3835262**
	MBC700	d1"1/2-Rp2"/TC	**3835238**	**3835248**	**3835258**	**3835243**	**3835253**	**3835263**
	MBC300	d3/4"-Rp1"1/4/TC	**3835239**	**3835249**	**3835259**	**3835244**	**3835254**	**3835264**

OTHER AVAILABLE VERSIONS

VENT Versions for continuous ventilation and post-ventilation

PED PED version for continuous operation

SCOPE OF SUPPLY

The burner is delivered in its package complete with:
- 1 burner head with flange seal and securing screws
- 1 compact gas train with gas filter; the gas filter is built-in for threaded valves (up to 2") and separated for flanged ones (DN65/80/100)
- 1 bag containing installation fittings
- 1 bag containing technical documentation (instruction manual, technical data, electrical diagram, exploded view and spare parts list)

GEM | Variatron | MDE2 | RTC | LOW NOx CLASS 3

DIMENSIONS (mm)

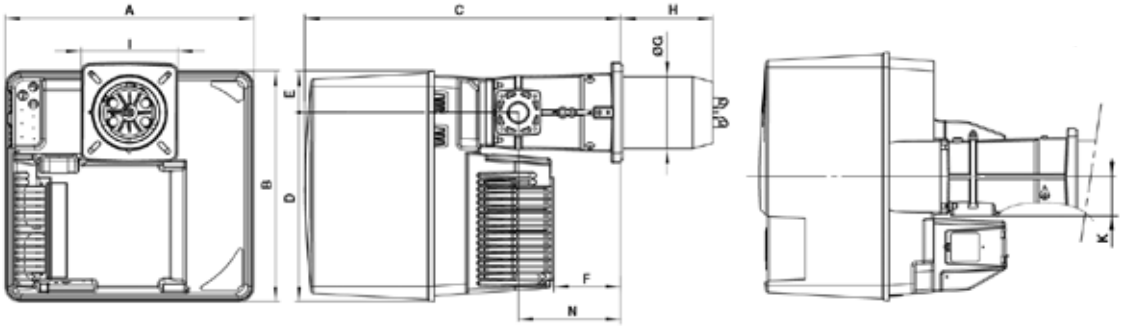

Connecting flange

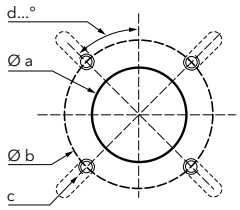

A	B	C	D	E	F	ØG	H			I	K	N
							KN	KM	KL			
581	549	752	450	99	164	170	215	325	435	230x238	89	244

Øa (mm)	b (mm)	c	d
195	220-260	M10	45°

Gas trains

Gas train "d":

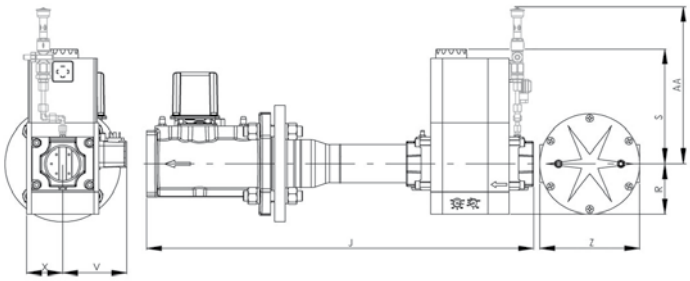

Model	J	R	S	V	X	Z	AA*
d65-DN65	490	183	245	110	98	290	385
d2"-Rp2"	700	96	330	125	81	-	385
d1"1/2-Rp2"	622	80	185	102	57	-	320
d3/4"-Rp1"1/4	460	60	173	88	58	-	320

Gas train "s":

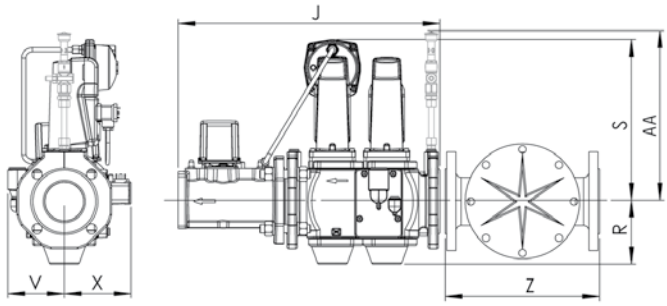

Model	J	R	S	V	X	Z	AA*
s65-DN65	490	118	300	106	126	290	365

***: for PED configuration**

PACKAGING

The burner is delivered on a pallet in 3 packages containing:

- burner housing
- combustion head
- gas train and filter

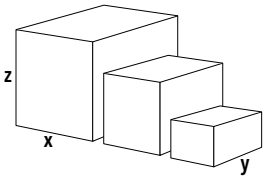

Component		Dimensions (mm)			Gross weight (kg)
		X	Y	Z	
Burner body	VG 5.950 M V	800	600	850	56
	VG 5.1200 M V	800	600	850	56
Combustion head	KN	780	265	280	12,3
	KL	1010	265	280	14,4
	KM	1010	265	280	13,4
Gas train	s65-DN65/TC	670	550	380	29
	d65-DN65/TC	670	550	380	33
	d2"-Rp2"/TC	670	550	380	22
	d1"1/2-Rp2"/TC	670	550	380	21
	d3/4"-Rp1"1/4/TC	590	290	180	12

VG 5.950 M V, VG 5.1200 M V

160 ... 1160 kW
2 stage progressive/modulating electronic (Low NOx class 3) + fan speed control

PRESSURE LOSS [BURNER HEAD + GAS TRAIN] (mbar)

VG 5.950 M V

Burner output (kW)	Natural gas G20 Hi = 10,35 kWh/m³					Natural gas G25 Hi = 8,83 kWh/m³					LPG G31
	d3/4-Rp1"1/4	d1"1/2-Rp2"	d2"-Rp2"	d65-DN65	S65-DN65	d3/4-Rp1"1/4	d1"1/2-Rp2"	d2"-Rp2"	d65-DN65	s65-DN65	d1"1/2-Rp2"
500	31	9	8	5	5	37	11	9	5	6	6
600	43	13	10	8	8	53	16	12	7	9	8
700	58	17	13	10	10	73	21	15	10	12	10
800	76	22	16	13	13	96	28	19	13	16	13
900	97	27	19	17	17	124	35	23	17	20	16

Natural gas G20

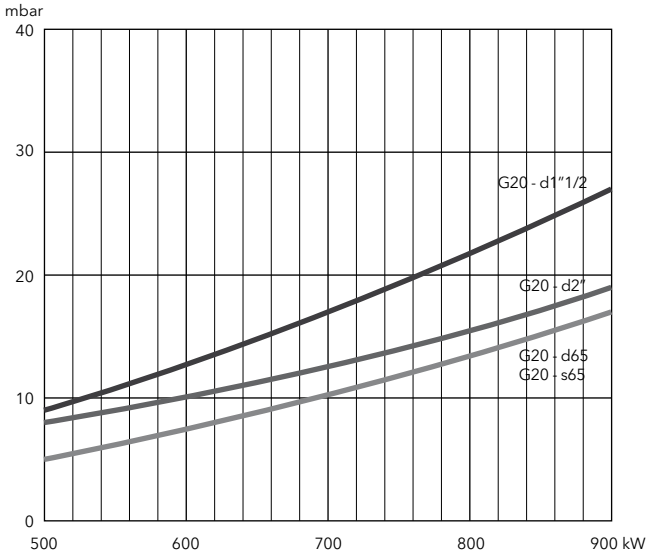

Natural gas G25

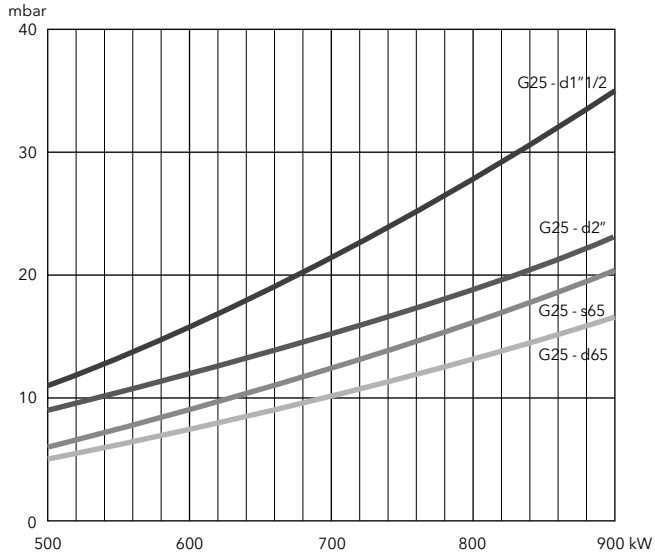

Natural gas G20, G25

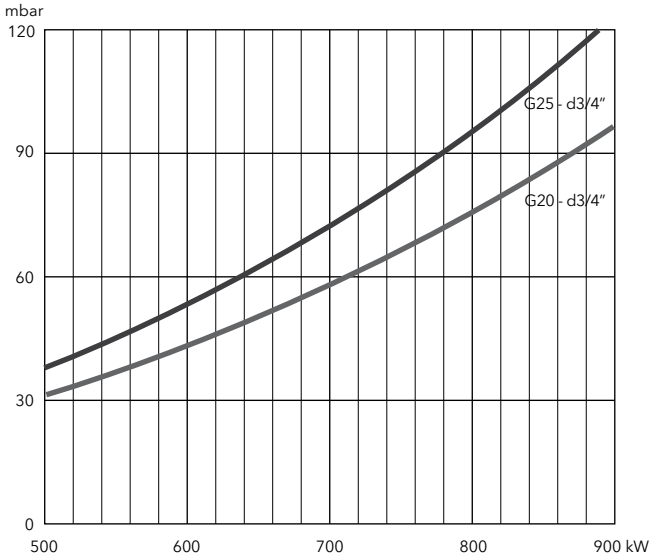

LPG

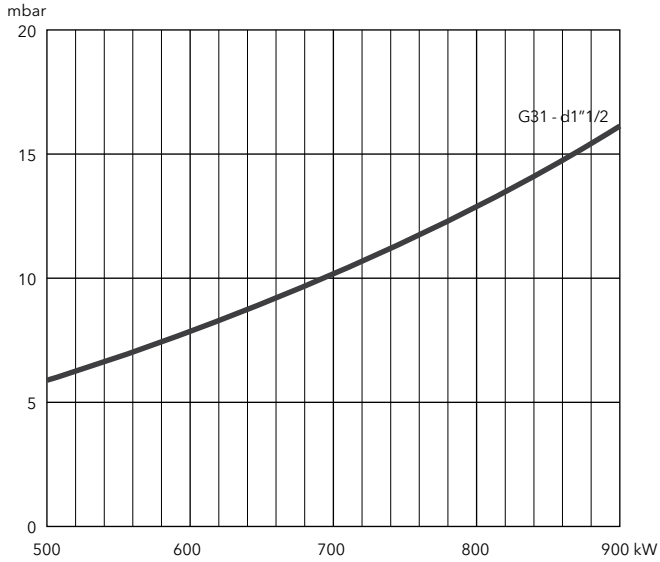

GEM | Variatron | MDE2 | RTC | LOW NOx CLASS 3

PRESSURE LOSS [BURNER HEAD + GAS TRAIN] (mbar)

VG 5.1200 M V

Burner output (kW)	Natural gas G20 Hi = 10,35 kWh/m³					Natural gas G25 Hi = 8,83 kWh/m³					LPG G31
	d3/4-Rp1"1/4	d1"1/2-Rp2"	d2"-Rp2"	d65-DN65	s65-DN65	d3/4-Rp1"1/4	d1"1/2-Rp2"	d2"-Rp2"	d65-DN65	s65-DN65	d1"1/2-Rp2"
700	40	16	12	10	10	60	21	14	10	12	10
800	53	20	14	13	13	79	27	17	13	15	12
900	68	25	17	16	16	100	34	21	16	19	15
1000	84	31	21	20	20	126	42	26	20	24	18
1100	103	37	25	24	24	154	50	31	24	29	22
1200	123	44	29	29	29	186	59	36	29	34	26

Natural gas G20

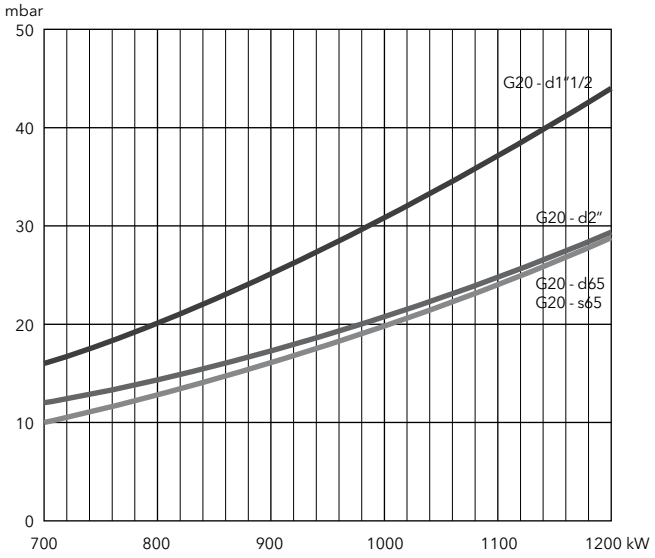

Natural gas G25

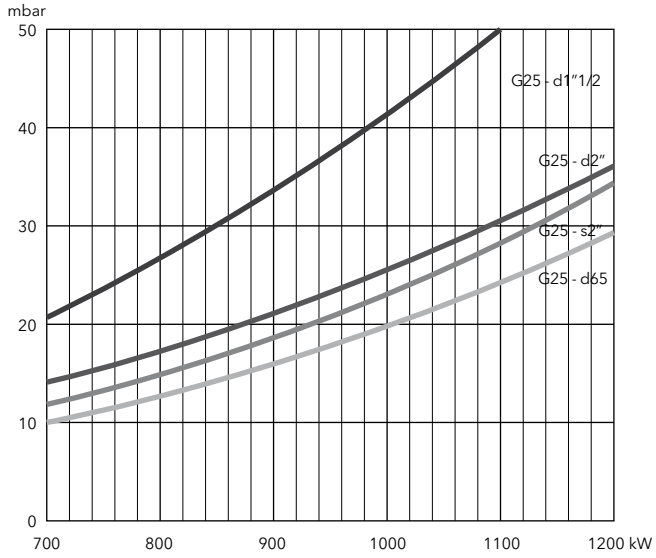

Natural gas G20, G25

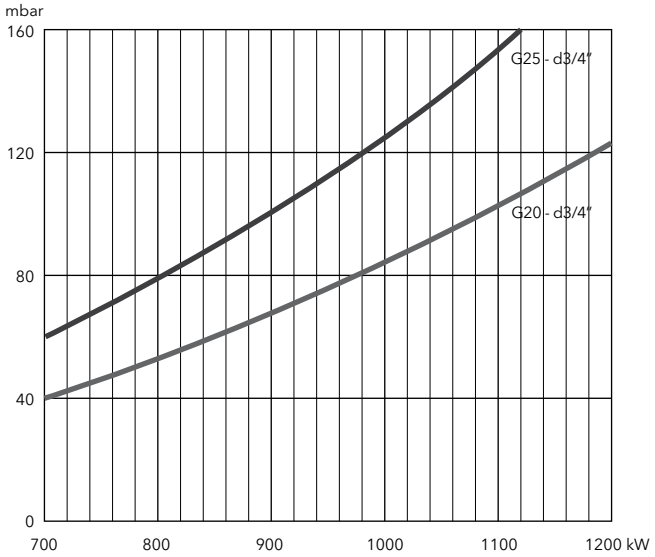

LPG

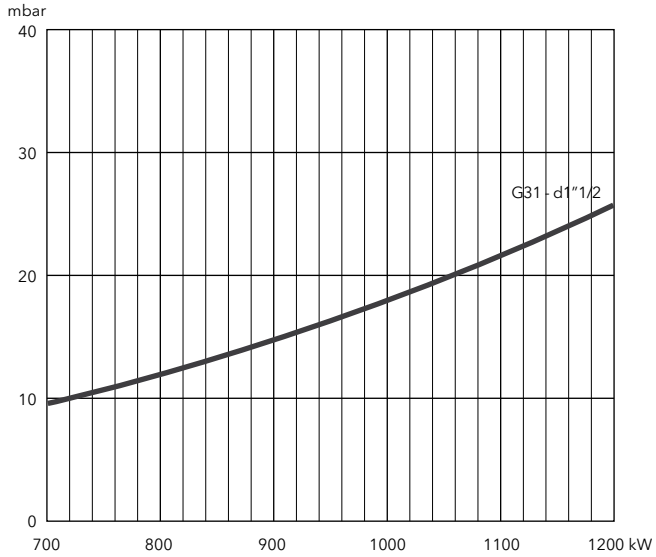

VG 6.1600 M V, VG 6.2100 M V

240 ... 1900 kW
2 stage progressive/modulating electronic (Low NOx class 3) + fan speed control

- **Fuels:** natural gas (G20/G25, H_u = 8,83…10,35 kWh/m³);
  LPG (G31, H_u = 25,89 kWh/m³)
- **Emission class:** Low NOx class 3 (<80 mg/kWh) according to EN676
- **Operation:** two stage progressive or modulating with the installation of a power regulator and dedicated probes (see pag. 156)
- **Protection level:** IP 21

TECHNICAL DATA

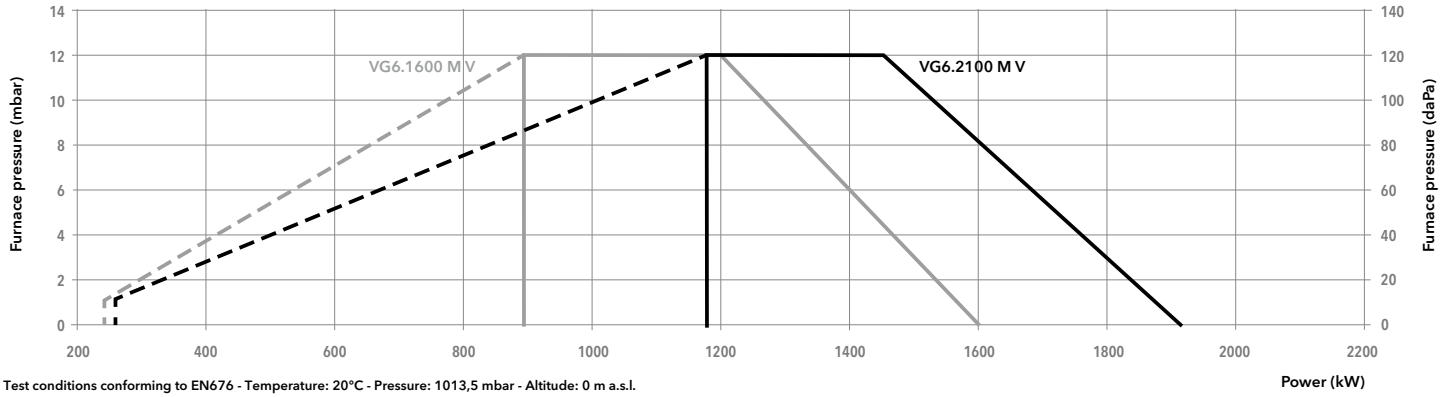

Test conditions conforming to EN676 - Temperature: 20°C - Pressure: 1013,5 mbar - Altitude: 0 m a.s.l.

Model			VG 6.1600 M V /TC			VG 6.2100 M V /TC		
Operation range			(240) 890 - 1600 kW			(260) 1180 - 1900 kW		
Gas pressure			20 - 300 mbar			20 - 300 mbar		
Control box / flame detection			BT3... / ionization			BT3... / ionization		
Fan motor			230/400 V - 50 Hz - 2,2 kW			230/400 V - 50 Hz - 2,7 kW		
Electrical consumption			55 + 2600 W			55 + 3400 W		
Acoustic level (LpA)			77,2 dB(A)			79 dB(A)		
CE certificate			0085 CN 0192			0085 CN 0192		
Head lenght			KN	KL	KM	KN	KL	KM
Complete burner code	VGD 40-065	s65-DN65/TC	**3835265**	**3835273**	**3835281**	**3835269**	**3835277**	**3835285**
	MBC1900	d65-DN65/TC	**3835266**	**3835274**	**3835282**	**3835270**	**3835278**	**3835286**
	MBC1200	d2"-Rp2"/TC	**3835267**	**3835275**	**3835283**	**3835271**	**3835279**	**3835287**
	MBC700	d1"1/2-Rp2"/TC	**3835268**	**3835276**	**3835284**	**3835272**	**3835280**	**3835288**

OTHER AVAILABLE VERSIONS

VENT Versions for continuous ventilation and post-ventilation

PED PED version for continuous operation

SCOPE OF SUPPLY

The burner is delivered in its package complete with:
- 1 burner head with flange seal and securing screws
- 1 compact gas train with gas filter; the gas filter is built-in for threaded valves (up to 2") and separated for flanged ones (DN65/80/100)
- 1 bag containing installation fittings
- 1 bag containing technical documentation (instruction manual, technical data, electrical diagram, exploded view and spare parts list)

GEM | Variatron | MDE2 | RTC | LOW NOx CLASS 3

DIMENSIONS (mm)

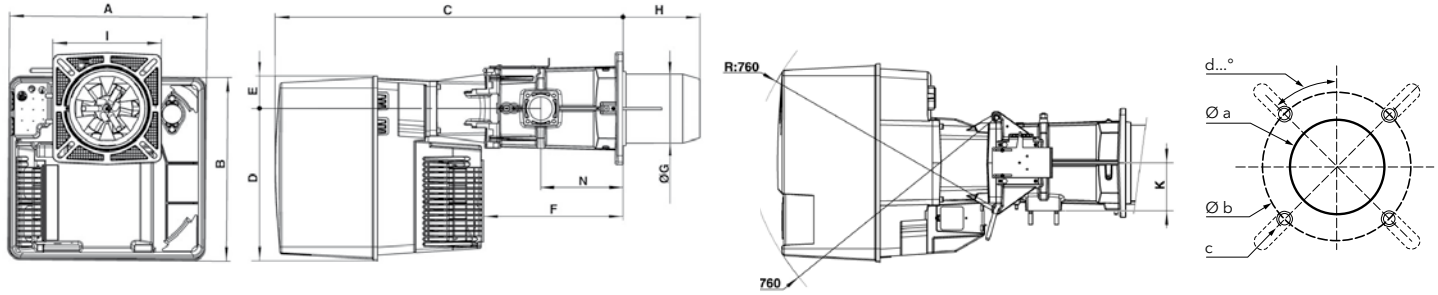

A	B	C	D	E	F	ØG	H			I	K	N
							KN	KM	KL			
592	553	1050	456	97	421	227	360	460	560	326x335	144	247

Øa (mm)	b (mm)	c	d
250	300-400	M12	45°

Gas trains

Gas train "d":

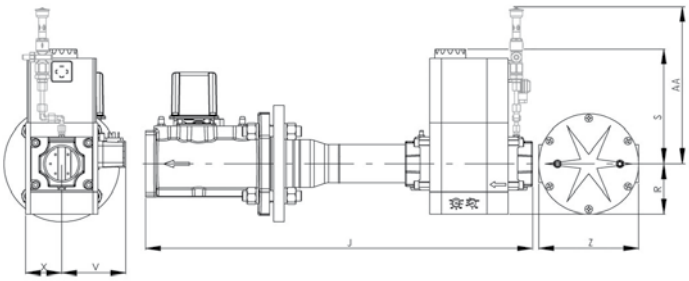

Model	J	R	S	V	X	Z	AA*
d65-DN65	490	183	245	110	98	290	385
d2"-Rp2"	700	96	330	125	81	-	385
d1"1/2-Rp2"	622	80	185	102	57	-	320

Gas train "s":

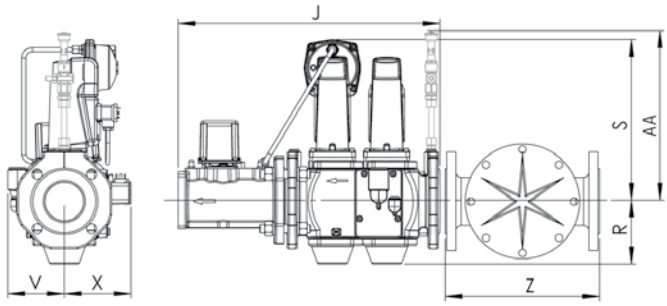

Model	J	R	S	V	X	Z	AA*
s65-DN65	490	118	300	106	126	290	365

***: for PED configuration**

PACKAGING

The burner is delivered on a pallet in 3 packages containing:

- burner housing
- combustion head
- gas train and filter

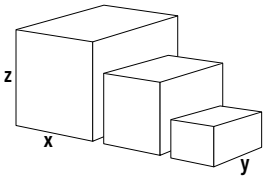

Component		Dimensions (mm)			Gross weight (kg)
		X	Y	Z	
Burner body	**VG 6.1600 M V**	800	600	850	56
	VG 6.2100 M V	800	600	850	56
Combustion head	**KN**	1000	380	420	26,7
	KL	1100	380	430	29,4
	KM	1100	380	430	28
Gas train	**s65-DN65/TC**	670	550	380	29,4
	d65-DN65/TC	670	550	380	33
	d2"-Rp2"/TC	670	550	380	22
	d1"1/2-Rp2"/TC	670	550	380	21

VG 6.1600 M V, VG 6.2100 M V

240 ... 1900 kW
2 stage progressive/modulating electronic (Low NOx class 3) + fan speed control

PRESSURE LOSS [BURNER HEAD + GAS TRAIN] (mbar)

VG 6.1600 M V

Burner output (kW)	Natural gas G20 Hi = 10,35 kWh/m³				Natural gas G25 Hi = 8,83 kWh/m³				LPG G31 Hi = 25,89 kWh/m³
	d1"1/2-Rp2"	d2"-Rp2"	d65-DN65	s65-DN65	d1"1/2-Rp2"	d2"-Rp2"	d65-DN65	s65-DN65	d1"1/2-Rp2"
800	16	9	6	6	22	12	8	8	8
1000	25	13	10	9	34	18	12	12	12
1200	35	18	14	13	48	24	18	18	17
1400	47	24	19	18	64	32	24	24	22
1600	61	31	25	23	83	42	31	31	29

Natural gas G20

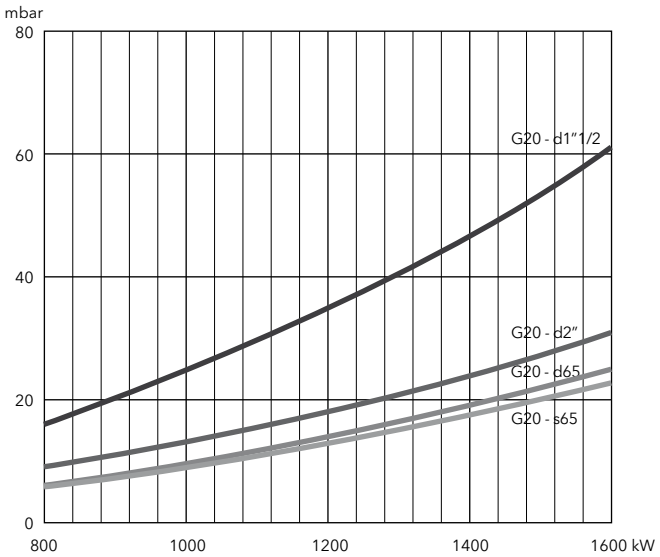

Natural gas G25

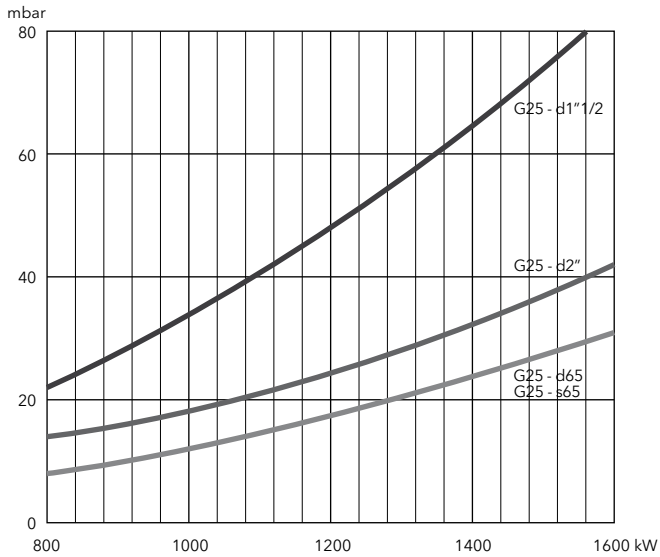

LPG

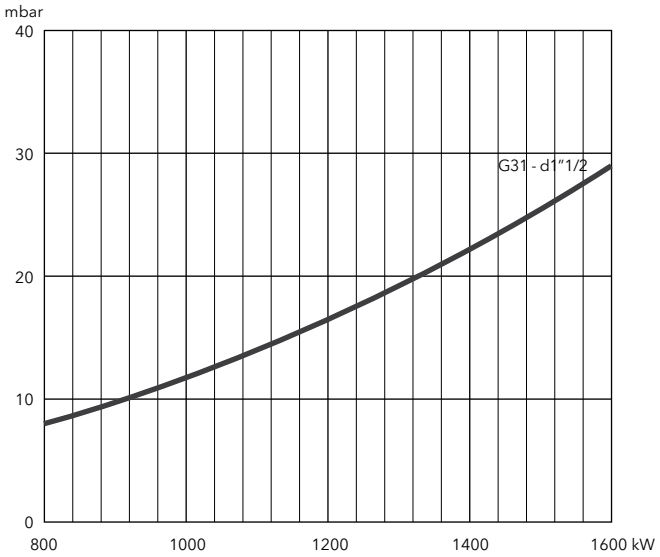

GEM Variatron MDE2 RTC LOW NOx CLASS 3

PRESSURE LOSS [BURNER HEAD + GAS TRAIN] (mbar)

VG 6.2100 M V

Burner output (kW)	Natural gas G20 Hi = 10,35 kWh/m³				Natural gas G25 Hi = 8,83 kWh/m³				LPG G31 Hi = 25,89 kWh/m³	
	d1"1/2-Rp2"	d2"-Rp2"	d65-DN65	s65-DN65	d1"1/2-Rp2"	d2"-Rp2"	d65-DN65	s65-DN65	d1"1/2-Rp2"	d2"-Rp2"
1100	28	15	12	11	39	21	15	15	13	9
1300	39	21	16	16	54	29	21	22	18	11
1500	51	27	21	21	71	37	28	29	23	14
1700	64	34	27	27	91	47	36	37	29	17
1900	80	41	34	34	114	59	45	46	36	20

Natural gas G20

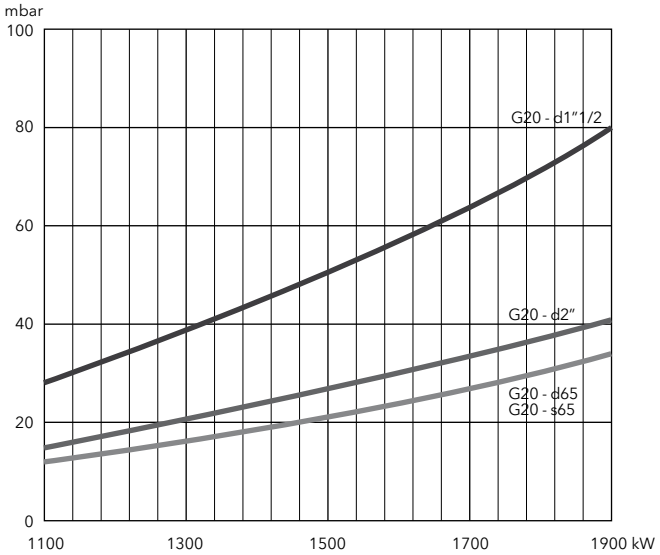

Natural gas G25

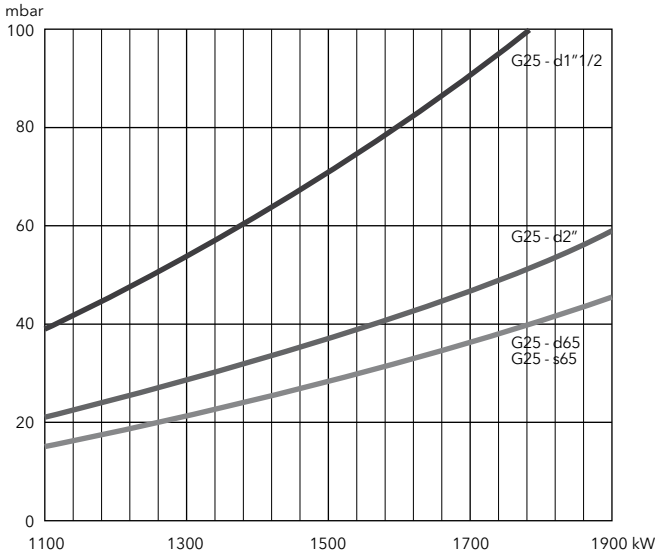

LPG

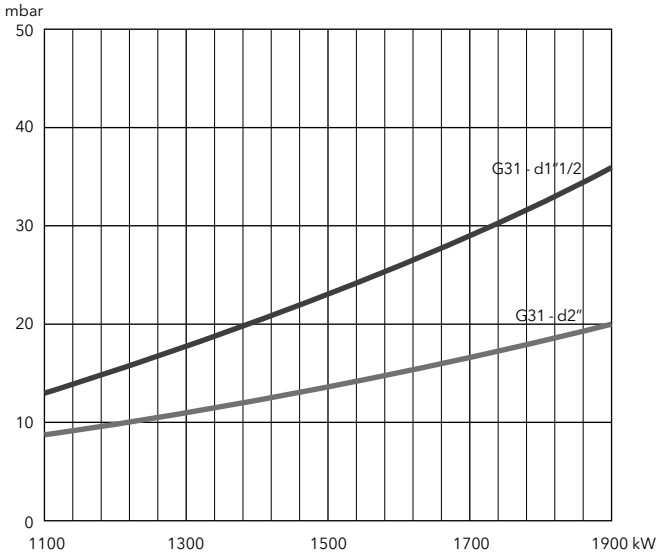

VG 5.950 M R, VG 5.1200 M R

150 ... 1200 kW
2 stage progressive/modulating electronic

- **Fuels:** natural gas (G20/G25, H_u = 8,83…10,35 kWh/m³);
  LPG (G31, H_u = 25,89 kWh/m³)
- **Emission class:** Low NOx class 2 (<120 mg/kWh) according to EN676
- **Operation:** two stage progressive or modulating with the installation of a power regulator and dedicated probes (see pag. 156)
- **Protection level:** IP 21

TECHNICAL DATA

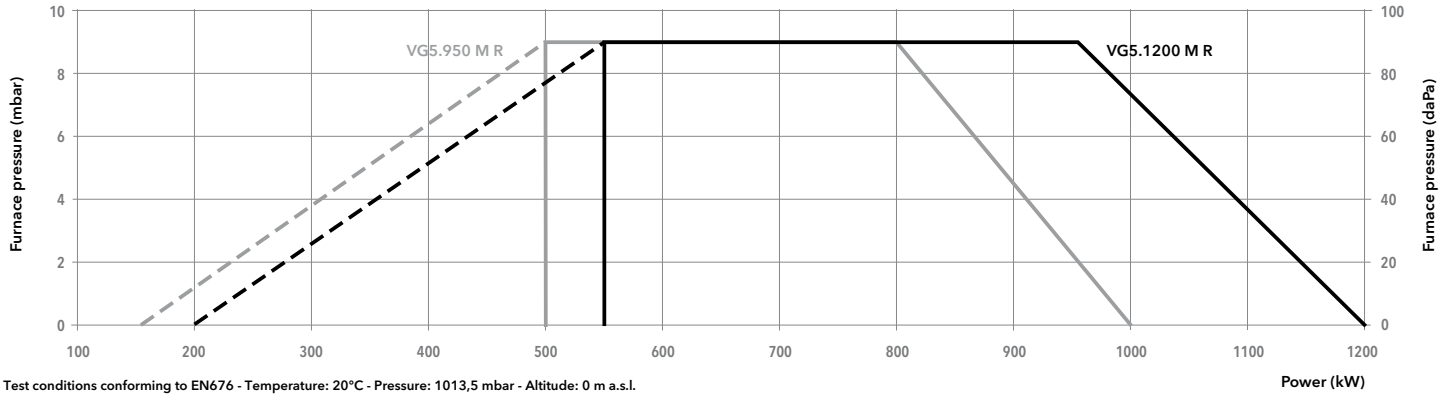

Test conditions conforming to EN676 - Temperature: 20°C - Pressure: 1013,5 mbar - Altitude: 0 m a.s.l.

Model			VG 5.950 M R /TC			VG 5.1200 M R /TC		
Operation range			(150) 500 - 1000 kW			(200) 550 - 1200 kW		
Gas pressure			50 - 500 mbar			50 - 500 mbar		
Control box / flame detection			BT3... / ionization			BT3... / ionization		
Fan motor			230/400 V - 50 Hz - 1,5 kW			230/400 V - 50 Hz - 1,5 kW		
Electrical consumption			100 + 2200 W			100 + 2300 W		
Acoustic level (LpA)			77 dB(A)			77 dB(A)		
CE certificate			0085 CQ 0570			0085 CQ 0570		
Head lenght			KN	KL	KM	KN	KL	KM
Complete burner code	VGD 40-065	s65-DN65/TC	**3835413**	**3835414**	**3835415**	**3835428**	**3835429**	**3835430**
	MBC1900	d65-DN65/TC	**3835416**	**3835417**	**3835418**	**3835431**	**3835432**	**3835433**
	MBC1200	d2"-Rp2"/TC	**3835419**	**3835420**	**3835421**	**3835434**	**3835435**	**3835436**
	MBC700	d1"1/2-Rp2"/TC	**3835422**	**3835423**	**3835424**	**3835437**	**3835438**	**3835439**
	MBC300	d3/4"-Rp1"1/4/TC	**3835425**	**3835426**	**3835427**	**3835440**	**3835441**	**3835442**

OTHER AVAILABLE VERSIONS

VENT Versions for continuous ventilation and post-ventilation

PED PED version for continuous operation

SCOPE OF SUPPLY

The burner is delivered in its package complete with:
- 1 burner head with flange seal and securing screws
- 1 compact gas train with gas filter; the gas filter is built-in for threaded valves (up to 2") and separated for flanged ones (DN65/80/100)
- 1 bag containing installation fittings
- 1 bag containing technical documentation (instruction manual, technical data, electrical diagram, exploded view and spare parts list)

GEM MDE2 RTC

DIMENSIONS (mm)

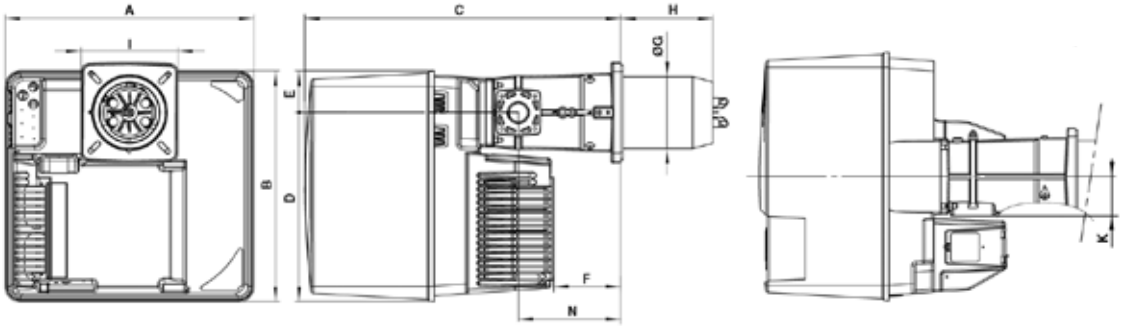

Connecting flange

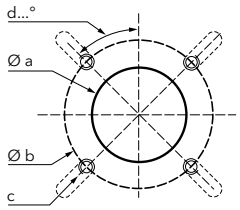

A	B	C	D	E	F	ØG	H			I	K	N
							KN	KM	KL			
581	549	752	450	99	164	170	215	325	435	230x238	89	244

Øa (mm)	b (mm)	c	d
195	220-260	M10	45°

Gas trains

Gas train "d":

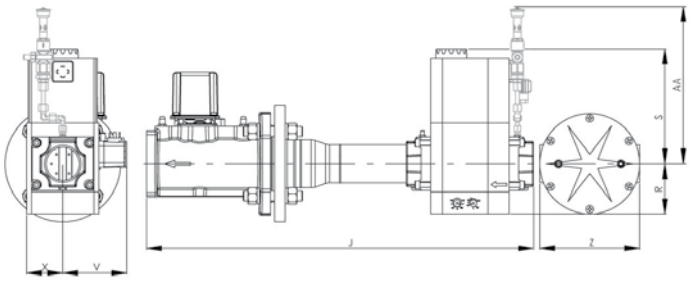

Model	J	R	S	V	X	Z	AA*
d65-DN65	490	183	245	110	98	290	385
d2"-Rp2"	700	96	330	125	81	-	385
d1"1/2-Rp2"	622	80	185	102	57	-	320
d3/4"-Rp1"1/4	460	60	173	88	58	-	320

Gas train "s":

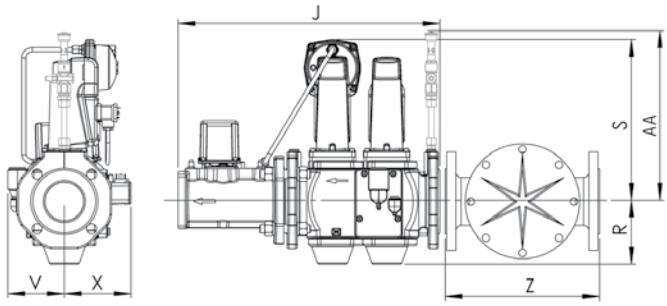

Model	J	R	S	V	X	Z	AA*
s65-DN65	490	118	300	106	126	290	365

***: for PED configuration**

PACKAGING

The burner is delivered on a pallet in 3 packages containing:

- burner housing
- combustion head
- gas train and filter

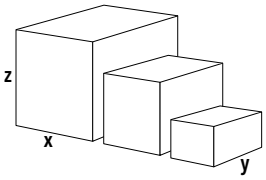

Component		Dimensions (mm)			Gross weight (kg)
		X	Y	Z	
Burner body	VG 5.950 M R	800	600	850	53,4
	VG 5.1200 M R	800	600	850	54,6
Combustion head	KN	780	265	280	12,3
	KL	1010	265	280	14,4
	KM	1010	265	280	13,4
Gas train	s65-DN65/TC	670	550	380	29
	d65-DN65/TC	670	550	380	17,2
	d2"-Rp2"/TC	670	550	380	12
	d1"1/2-Rp2"/TC	670	550	380	12
	d3/4"-Rp1"1/4/TC	590	390	180	7

VG 5.950 M R, VG 5.1200 M R

150 ... 1200 kW
2 stage progressive/modulating electronic

PRESSURE LOSS [BURNER HEAD + GAS TRAIN] (mbar)

VG 5.950 M R

Burner output (kW)	Natural gas G20 Hi = 10,35 kWh/m³					Natural gas G25 Hi = 8,83 kWh/m³					LPG G31	
	d3/4-Rp1"1/4	d1"1/2-Rp2"	d2"-Rp2"	d65-DN65	s65-DN65	d3/4-Rp1"1/4	d1"1/2-Rp2"	d2"-Rp2"	d65-DN65	s65-DN65	d1"1/2-Rp2"	d3/4-Rp1"1/4
500	31	10	7	6	6	46	15	11	9	9	17	8
600	45	15	9	9	9	67	22	16	12	13	24	11
700	61	20	13	12	12	91	30	22	17	18	32	15
800	79	26	17	15	15	118	39	28	22	23	42	20
900	124	33	21	19	19	149	49	35	28	29	53	25
1000	-	40	26	24	24	185	60	43	34	36	66	31

Natural gas G20

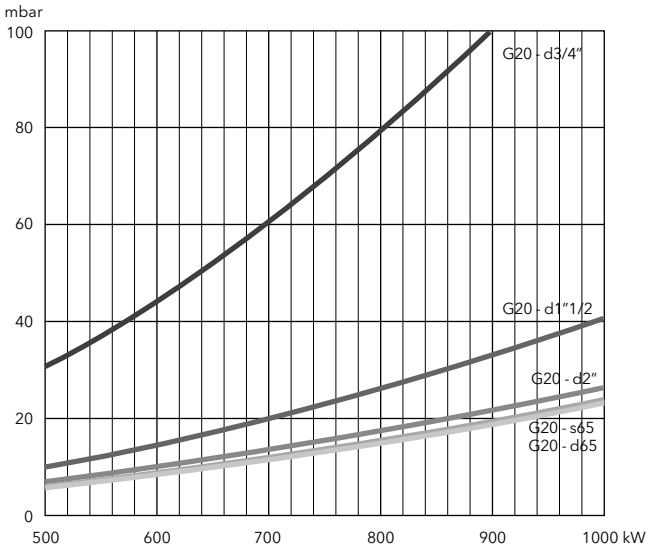

Natural gas G25

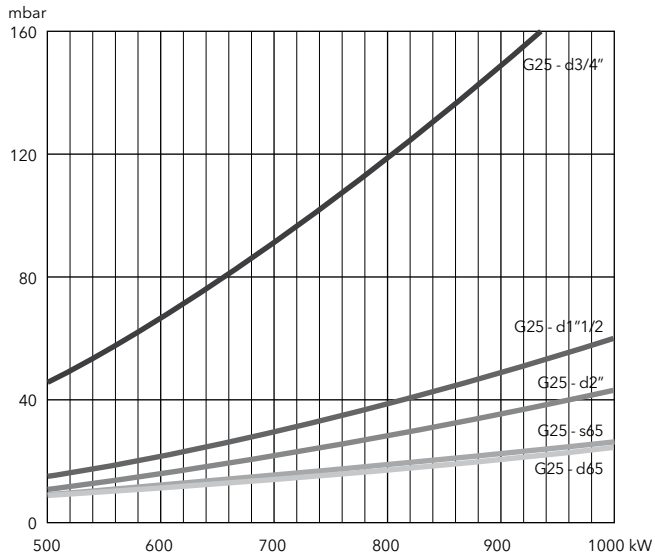

LPG

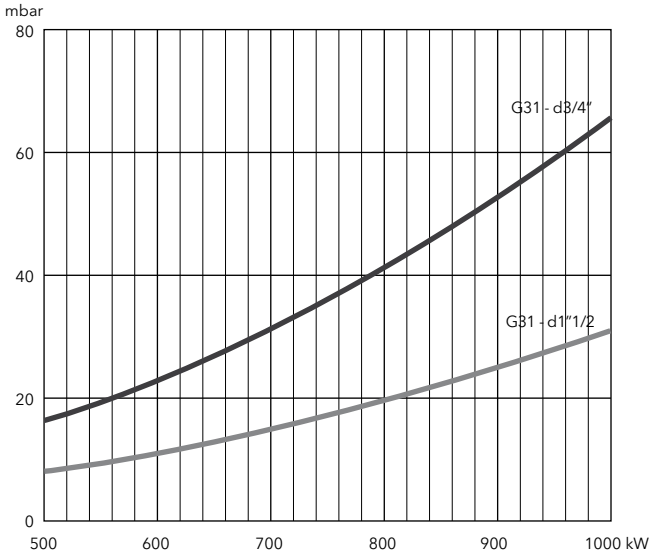

PRESSURE LOSS [BURNER HEAD + GAS TRAIN] (mbar)

VG 5.1200 M R

Burner output (kW)	Natural gas G20 Hi = 10,35 kWh/m³					Natural gas G25 Hi = 8,83 kWh/m³					LPG G31
	d3/4-Rp1"1/4	d1"1/2-Rp2"	d2"-Rp2"	d65-DN65	s65-DN65	d3/4-Rp1"1/4	d1"1/2-Rp2"	d2"-Rp2"	d65-DN65	s65-DN65	d1"1/2-Rp2"
700	58	17	10	8	9	86	25	14	12	13	10
800	75	22	13	10	11	112	32	19	16	17	14
900	95	27	16	13	14	142	41	24	20	21	17
1000	117	34	20	16	17	175	51	29	24	26	21
1100	142	41	24	20	21	213	62	36	30	32	26
1200	169	49	28	24	25	252	73	42	35	37	31

Natural gas G20

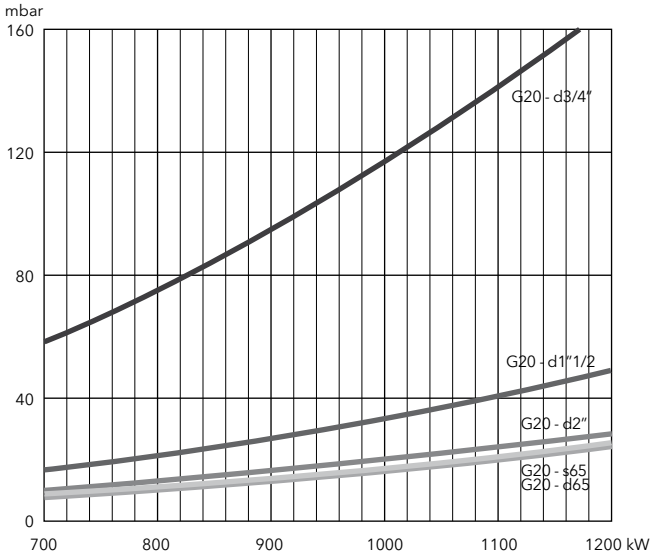

Natural gas G25

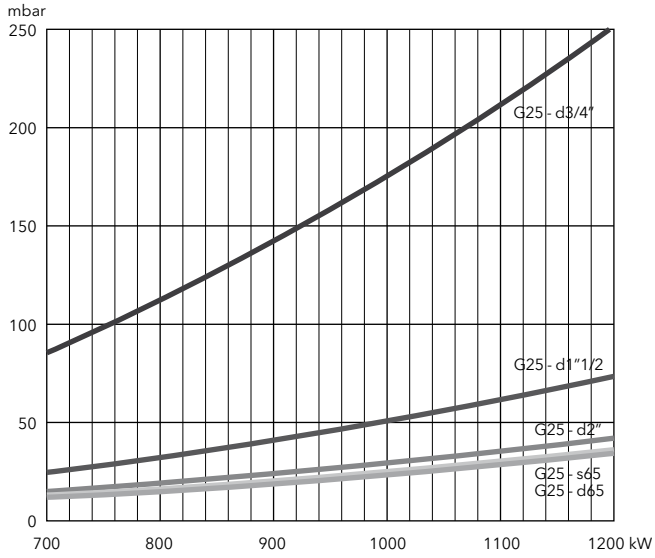

LPG

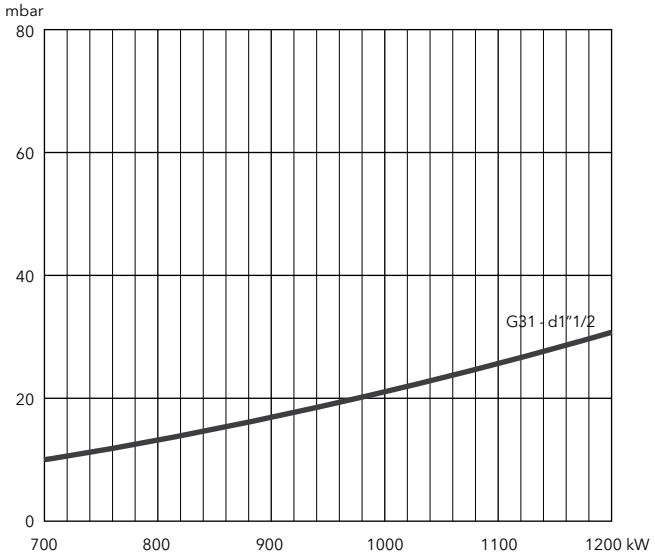

VG 6.1600 M R, VG 6.2100 M R

200 ... 2300 kW
2 stage progressive/modulating electronic

- **Fuels:** natural gas (G20/G25, H_u = 8,83…10,35 kWh/m³);
  LPG (G31, H_u = 25,89 kWh/m³)
- **Emission class:** Low NOx class 2 (<120 mg/kWh) according to EN676
- **Operation:** two stage progressive or modulating with the installation of a power regulator and dedicated probes (see pag. 156)
- **Protection level:** IP 21

TECHNICAL DATA

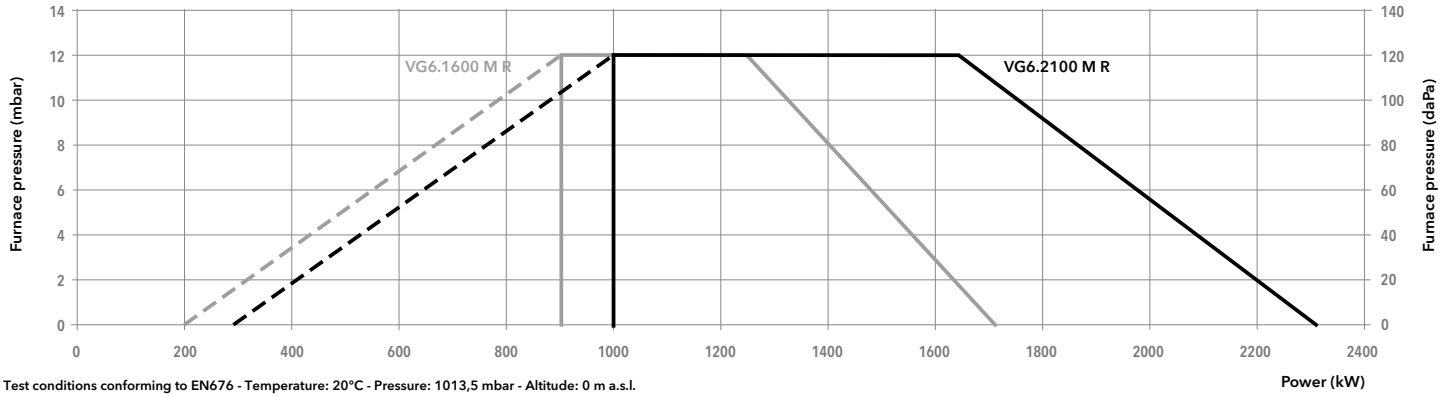

Test conditions conforming to EN676 - Temperature: 20°C - Pressure: 1013,5 mbar - Altitude: 0 m a.s.l.

Model			VG 6.1600 M R /TC			VG 6.2100 M R /TC		
Operation range			(200) 900 - 1700 kW			(300) 1000- 2300 kW		
Gas pressure			50 - 500 mbar			50 - 500 mbar		
Control box / flame detection			BT3... / ionization			BT3... / ionization		
Fan motor			230/400 V - 50 Hz - 2,2 kW			230/400 V - 50 Hz - 2,7 kW		
Electrical consumption			100 + 2500 W			100 + 3500 W		
Acoustic level (LpA)			77 dB(A)			79 dB(A)		
CE certificate			0085 CQ 0570			0085 CQ 0570		
Head lenght			KN	KL	KM	KN	KL	KM
Complete burner code	VGD 40-065	s65-DN65/TC	**3834834**	**3834835**	**3834836**	**3834846**	**3834847**	**3834848**
	MBC1900	d65-DN65/TC	**3834831**	**3834832**	**3834833**	**3834843**	**3834844**	**3834845**
	MBC1200	d2"-Rp2"/TC	**3834828**	**3834829**	**3834830**	**3834840**	**3834841**	**3834842**
	MBC700	d1"1/2-Rp2"/TC	**3834825**	**3834826**	**3834827**	**3834837**	**3834838**	**3834839**

OTHER AVAILABLE VERSIONS

VENT Versions for continuous ventilation and post-ventilation

PED PED version for continuous operation

SCOPE OF SUPPLY

The burner is delivered in its package complete with:
- 1 burner head with flange seal and securing screws
- 1 compact gas train with gas filter; the gas filter is built-in for threaded valves (up to 2") and separated for flanged ones (DN65/80/100)
- 1 bag containing installation fittings
- 1 bag containing technical documentation (instruction manual, technical data, electrical diagram, exploded view and spare parts list)

GEM MDE2 RTC

DIMENSIONS (mm)

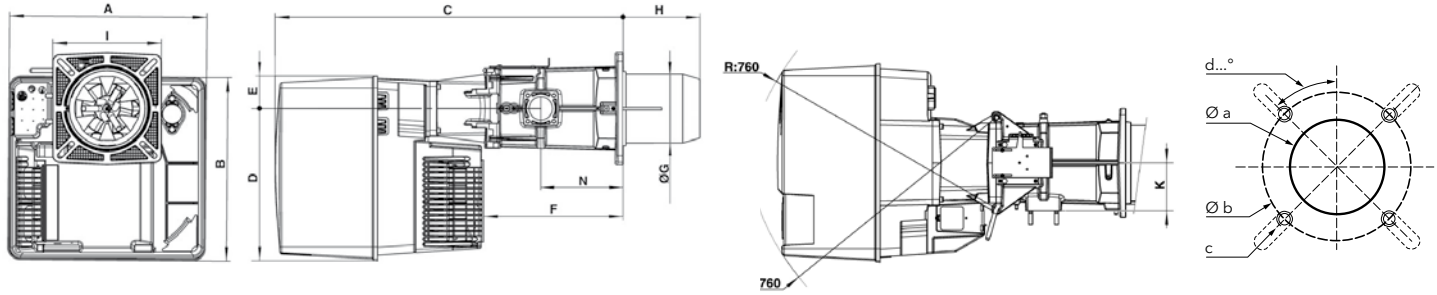

A	B	C	D	E	F	ØG	H			I	K	N
							KN	KM	KL			
592	553	1050	456	97	421	227	270	370	470	326x335	144	247

Øa (mm)	b (mm)	c	d
250	300-400	M12	45°

Gas trains

Gas train "d":

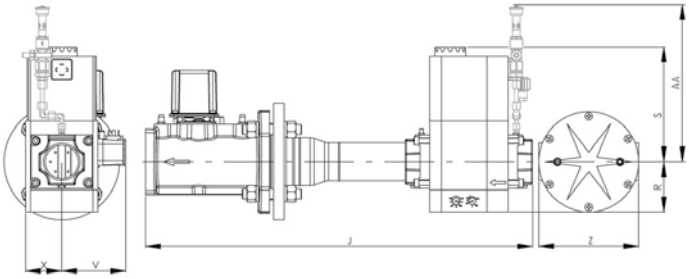

Model	J	R	S	V	X	Z	AA*
d65-DN65	490	183	245	110	98	290	385
d2"-Rp2"	700	96	330	125	81	-	385
d1"1/2-Rp2"	622	80	185	102	57	-	320

Gas train "s":

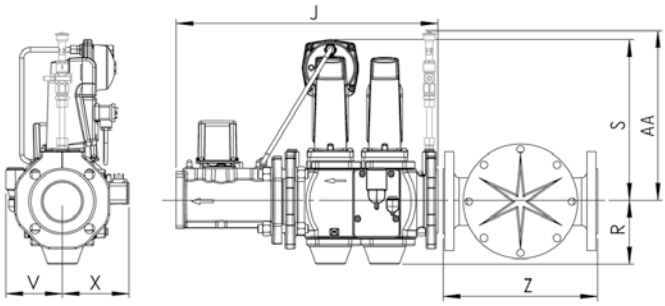

Model	J	R	S	V	X	Z	AA*
s65-DN65	490	118	300	106	126	290	365

***: for PED configuration**

PACKAGING

The burner is delivered on a pallet in 3 packages containing:

- burner housing
- combustion head
- gas train and filter

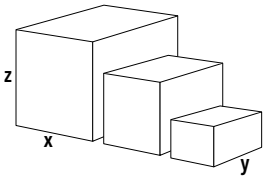

Component		Dimensions (mm)			Gross weight (kg)
		X	Y	Z	
Burner body	VG 6.1600 M R	800	600	850	67,8
	VG 6.2100 M R	800	600	850	69,2
Combustion head	KN	1000	380	420	26,7
	KL	1100	380	430	29,4
	KM	1100	380	430	28
Gas train	s65-DN65/TC	670	550	380	29,4
	d65-DN65/TC	670	550	380	33
	d2"-Rp2"/TC	670	550	380	16,5
	d1"1/2-Rp2"/TC	670	550	380	14,3

VG 6.1600 M R, VG 6.2100 M R

200 ... 2300 kW
2 stage progressive/modulating electronic

PRESSURE LOSS [BURNER HEAD + GAS TRAIN] (mbar)

VG 6.1600 M R

Burner output (kW)	Natural gas G20 Hi = 10,35 kWh/m³				Natural gas G25 Hi = 8,83 kWh/m³				LPG G31
	d1"1/2-Rp2"	d2"-Rp2"	d65-DN65	s65-DN65	d1"1/2-Rp2"	d2"-Rp2"	d65-DN65	s65-DN65	d1"1/2-Rp2"
800	17	7	5	6	25	10	8	9	5
1000	25	11	8	9	37	16	11	13	7
1200	36	16	11	13	54	23	16	19	10
1400	49	21	15	17	73	32	22	25	13
1600	64	28	19	22	96	41	29	33	17

Natural gas G20

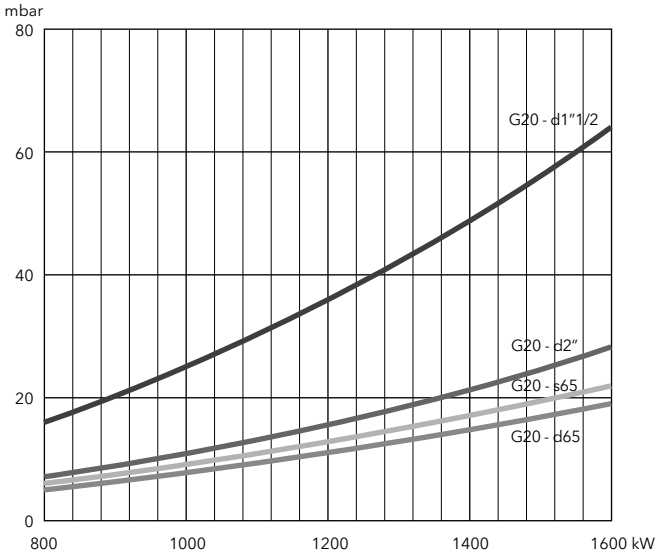

Natural gas G25

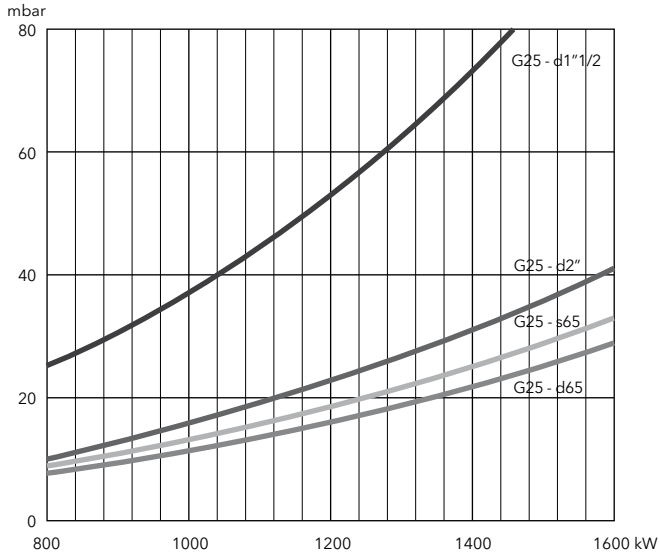

LPG

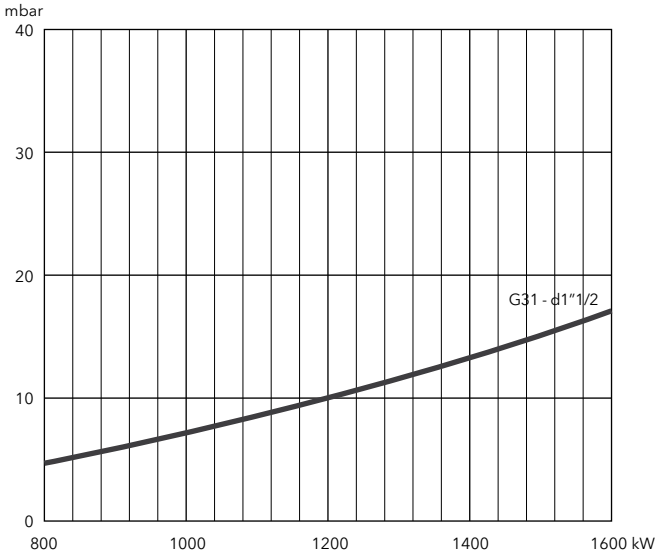

GEM MDE2 RTC

PRESSURE LOSS [BURNER HEAD + GAS TRAIN] (mbar)

VG 6.2100 M R

Burner output (kW)	Natural gas G20 Hi = 10,35 kWh/m³				Natural gas G25 Hi = 8,83 kWh/m³				LPG G31 Hi = 25,89 kWh/m³	
	d1"1/2-Rp2"	d2"-Rp2"	d65-DN65	s65-DN65	d1"1/2-Rp2"	d2"-Rp2"	d65-DN65	s65-DN65	d1"1/2-Rp2"	d2"-Rp2"
1300	40	16	10	12	60	24	15	18	19	9
1500	53	21	13	16	78	31	20	24	25	11
1700	68	27	17	20	102	40	26	30	32	14
1900	85	34	22	26	127	50	32	38	40	18
2100	104	41	27	31	156	61	40	46	48	22
2300	125	49	32	37	186	73	48	56	58	27

Natural gas G20

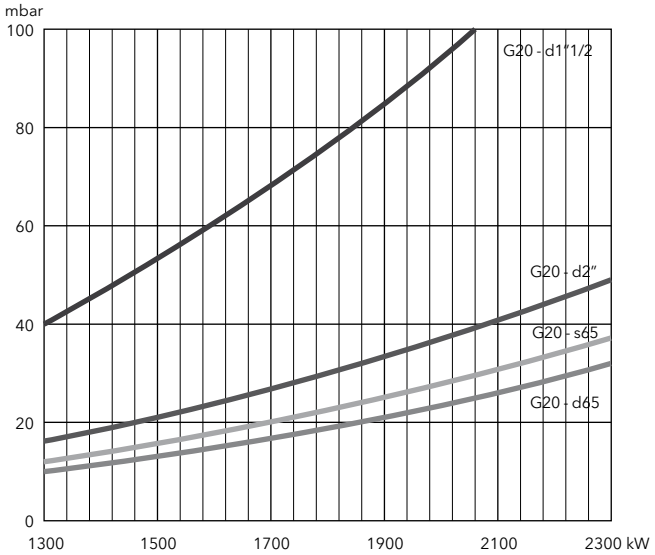

Natural gas G25

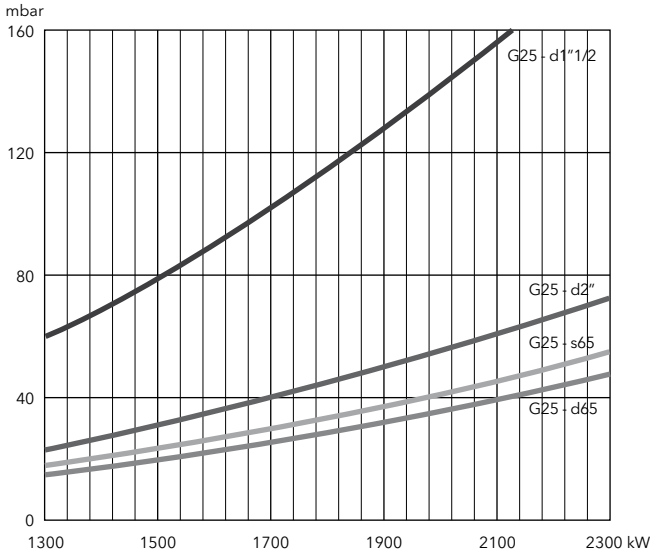

LPG

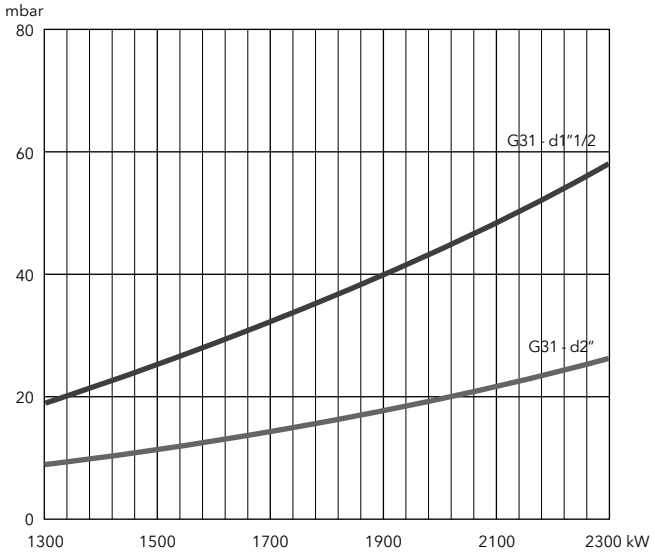

VG 5.950 M V R, VG 5.1200 M V R

150 ... 1200 kW
2 stage progressive/modulating electronic + fan speed control

- **Fuels:** natural gas (G20/G25, H_u = 8,83…10,35 kWh/m³);
  LPG (G31, H_u = 25,89 kWh/m³)
- **Emission class:** Low NOx class 2 (<120 mg/kWh) according to EN676
- **Operation:** two stage progressive or modulating with the installation of a power regulator and dedicated probes (see pag. 156)
- **Protection level:** IP 21

TECHNICAL DATA

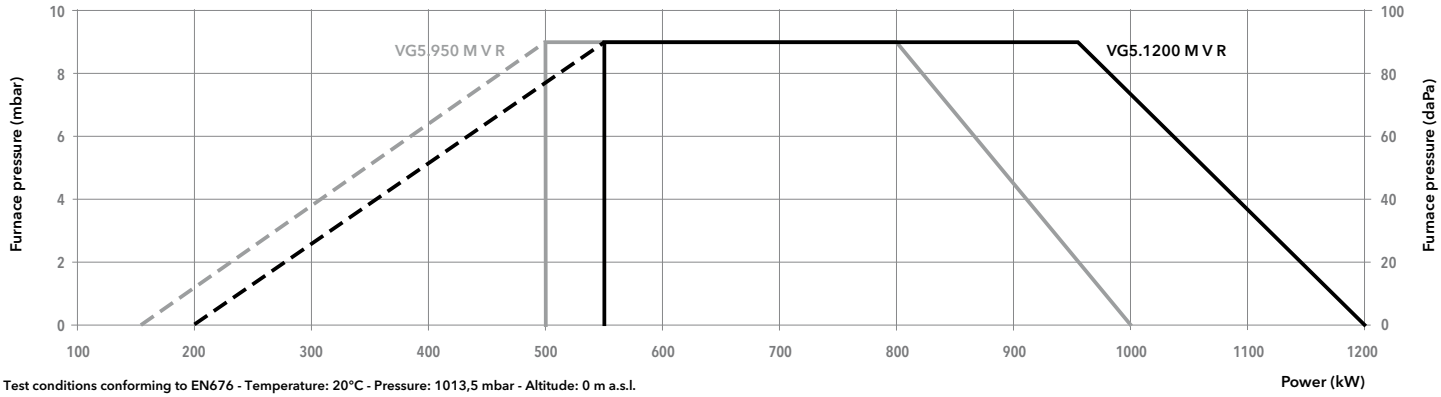

Test conditions conforming to EN676 - Temperature: 20°C - Pressure: 1013,5 mbar - Altitude: 0 m a.s.l.

Model			VG 5.950 M V R /TC			VG 5.1200 M V R /TC		
Operation range			(150) 500 - 1000 kW			(200) 550 - 1200 kW		
Gas pressure			50 - 500 mbar			50 - 500 mbar		
Control box / flame detection			BT3... / ionization			BT3... / ionization		
Fan motor			230/400 V - 50 Hz - 1,5 kW			230/400 V - 50 Hz - 1,5 kW		
Electrical consumption			100 + 2200 W			100 + 2300 W		
Acoustic level (LpA)			77 dB(A)			77 dB(A)		
CE certificate			0085 CQ 0570			0085 CQ 0570		
Head lenght			KN	KL	KM	KN	KL	KM
Complete burner code	VGD 40-065	s65-DN65/TC	**3835443**	**3835444**	**3835445**	**3835458**	**3835459**	**3835460**
	MBC1900	d65-DN65/TC	**3835446**	**3835447**	**3835448**	**3835461**	**3835462**	**3835463**
	MBC1200	d2"-Rp2"/TC	**3835449**	**3835450**	**3835451**	**3835464**	**3835465**	**3835466**
	MBC700	d1"1/2-Rp2"/TC	**3835452**	**3835453**	**3835454**	**3835467**	**3835468**	**3835469**
	MBC300	d3/4"-Rp1"1/4/TC	**3835455**	**3835456**	**3835457**	**3835470**	**3835471**	**3835472**

OTHER AVAILABLE VERSIONS

VENT Versions for continuous ventilation and post-ventilation

PED PED version for continuous operation

SCOPE OF SUPPLY

The burner is delivered in its package complete with:
- 1 burner head with flange seal and securing screws
- 1 compact gas train with gas filter; the gas filter is built-in for threaded valves (up to 2") and separated for flanged ones (DN65/80/100)
- 1 bag containing installation fittings
- 1 bag containing technical documentation (instruction manual, technical data, electrical diagram, exploded view and spare parts list)

DIMENSIONS (mm)

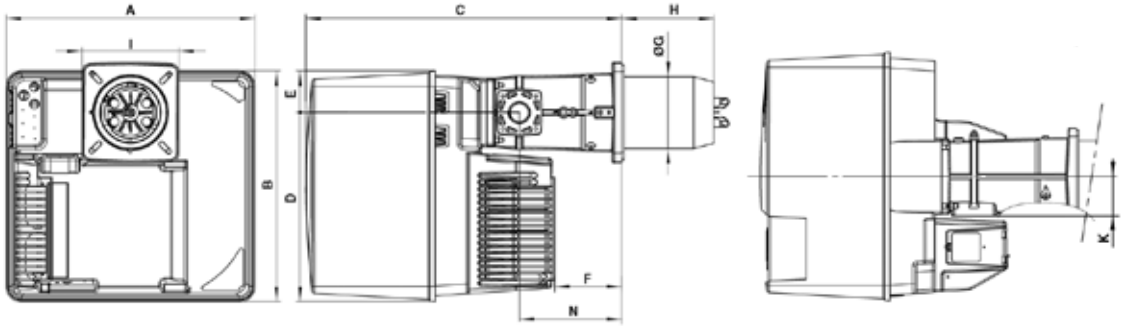

Connecting flange

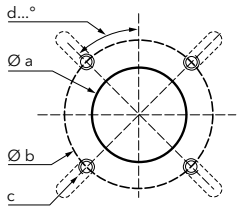

A	B	C	D	E	F	ØG	H			I	K	N
							KN	KM	KL			
581	549	752	450	99	164	170	215	325	435	230x238	89	244

Øa (mm)	b (mm)	c	d
195	220-260	M10	45°

Gas trains

Gas train "d":

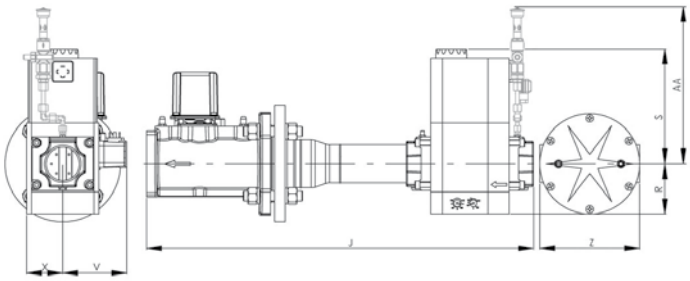

Model	J	R	S	V	X	Z	AA*
d65-DN65	490	183	245	110	98	290	385
d2"-Rp2"	700	96	330	125	81	-	385
d1"1/2-Rp2"	622	80	185	102	57	-	320
d3/4"-Rp1"1/4	460	60	173	88	58	-	320

Gas train "s":

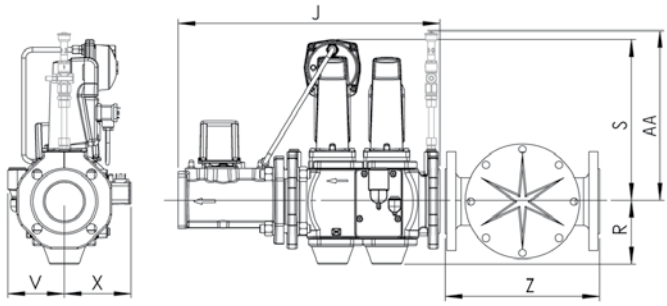

Model	J	R	S	V	X	Z	AA*
s65-DN65	490	118	300	106	126	290	365

***: for PED configuration**

PACKAGING

The burner is delivered on a pallet in 3 packages containing:

- burner housing
- combustion head
- gas train and filter

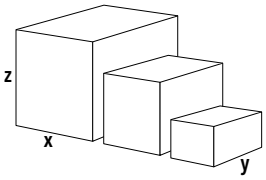

Component		Dimensions (mm)			Gross weight (kg)
		X	Y	Z	
Burner body	VG 5.950 M V R	800	600	850	53,4
	VG 5.1200 M V R	800	600	850	54,6
Combustion head	KN	780	265	280	12,3
	KL	1010	265	280	14,4
	KM	1010	265	280	13,4
Gas train	s65-DN65/TC	670	550	380	29
	d65-DN65/TC	670	550	380	17,2
	d2"-Rp2"/TC	670	550	380	12
	d1"1/2-Rp2"/TC	670	550	380	12
	d3/4"-Rp1"1/4/TC	590	390	180	7

VG 5.950 M V R, VG 5.1200 M V R

150 ... 1200 kW
2 stage progressive/modulating electronic + fan speed control

PRESSURE LOSS [BURNER HEAD + GAS TRAIN] (mbar)

VG 5.950 M V R

Burner output (kW)	Natural gas G20 Hi = 10,35 kWh/m³					Natural gas G25 Hi = 8,83 kWh/m³					LPG G31	
	d3/4-Rp1"1/4	d1"1/2-Rp2"	d2"-Rp2"	d65-DN65	s65-DN65	d3/4-Rp1"1/4	d1"1/2-Rp2"	d2"-Rp2"	d65-DN65	s65-DN65	d1"1/2-Rp2"	d3/4-Rp1"1/4
500	31	10	7	6	6	46	15	11	9	9	17	8
600	45	15	9	9	9	67	22	16	12	13	24	11
700	61	20	13	12	12	91	30	22	17	18	32	15
800	79	26	17	15	15	118	39	28	22	23	42	20
900	124	33	21	19	19	149	49	35	28	29	53	25
1000	-	40	26	24	24	185	60	43	34	36	66	31

Natural gas G20

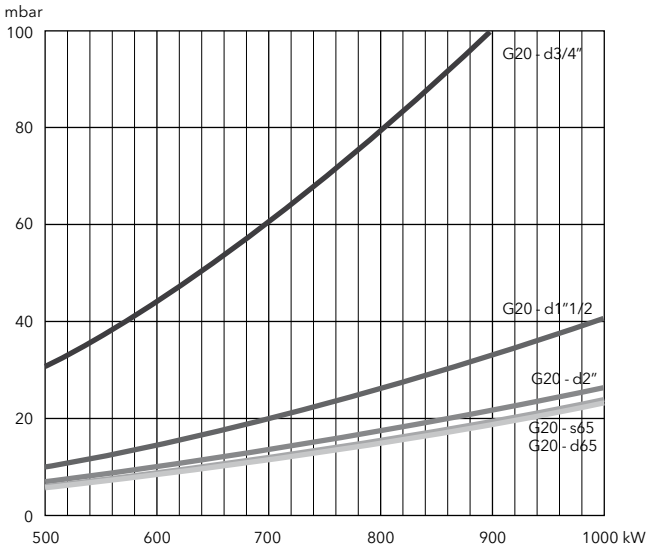

Natural gas G25

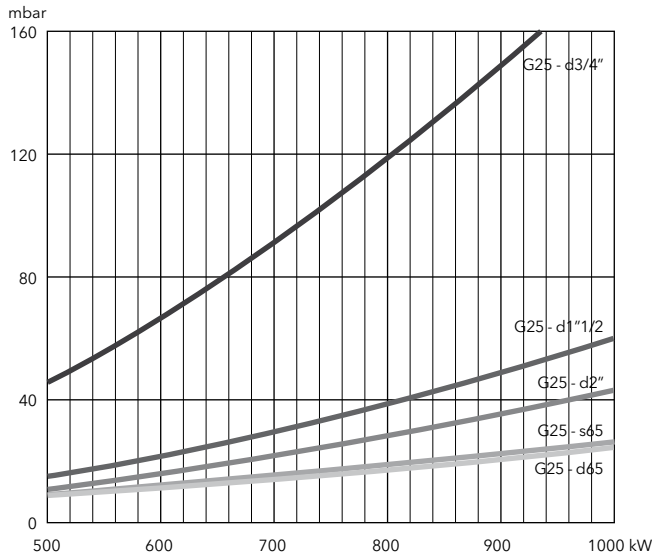

LPG

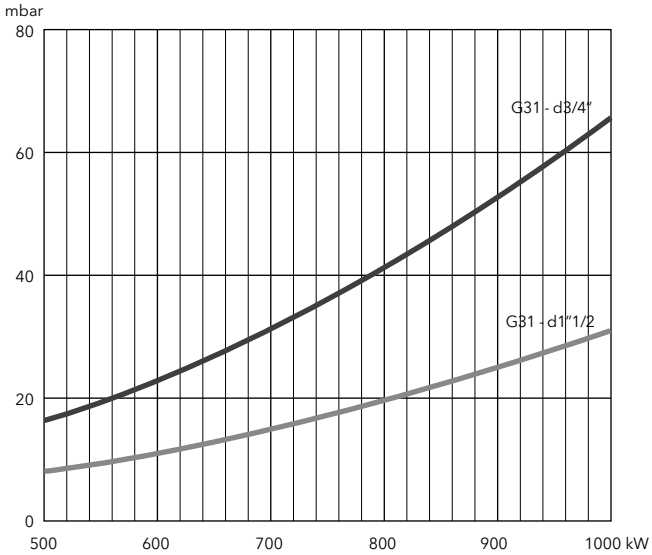

PRESSURE LOSS [BURNER HEAD + GAS TRAIN] (mbar)

VG 5.1200 M V R

Burner output (kW)	Natural gas G20 Hi = 10,35 kWh/m³					Natural gas G25 Hi = 8,83 kWh/m³					LPG G31
	d3/4-Rp1"1/4	d1"1/2-Rp2"	d2"-Rp2"	d65-DN65	s65-DN65	d3/4-Rp1"1/4	d1"1/2-Rp2"	d2"-Rp2"	d65-DN65	s65-DN65	d1"1/2-Rp2"
700	58	17	10	8	9	86	25	14	12	13	10
800	75	22	13	10	11	112	32	19	16	17	14
900	95	27	16	13	14	142	41	24	20	21	17
1000	117	34	20	16	17	175	51	29	24	26	21
1100	142	41	24	20	21	213	62	36	30	32	26
1200	169	49	28	24	25	252	73	42	35	37	31

Natural gas G20

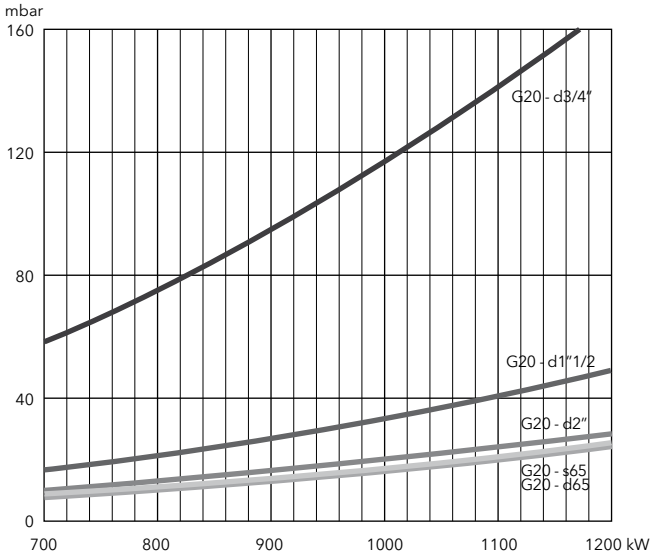

Natural gas G25

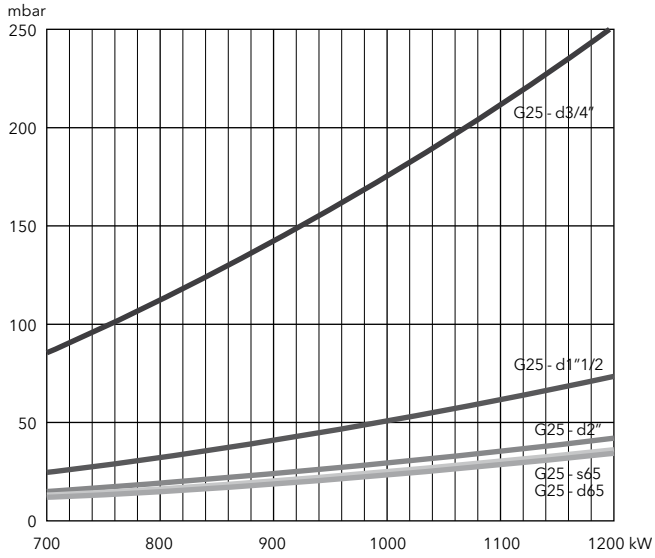

LPG

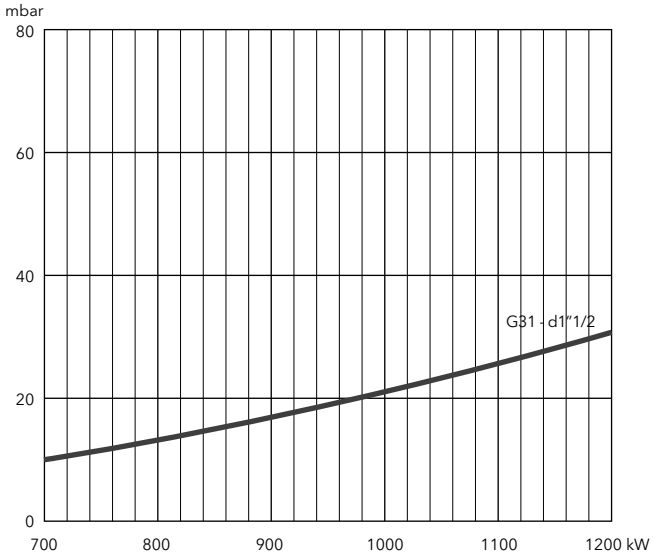

VG 6.1600 M V R, VG 6.2100 M V R

200 ... 2300 kW
2 stage progressive/modulating electronic + fan speed control

- **Fuels:** natural gas (G20/G25, H_u = 8,83…10,35 kWh/m³);
  LPG (G31, H_u = 25,89 kWh/m³)
- **Emission class:** Low NOx class 2 (<120 mg/kWh) according to EN676
- **Operation:** two stage progressive or modulating with the installation of a power regulator and dedicated probes (see pag. 156)
- **Protection level:** IP 21

TECHNICAL DATA

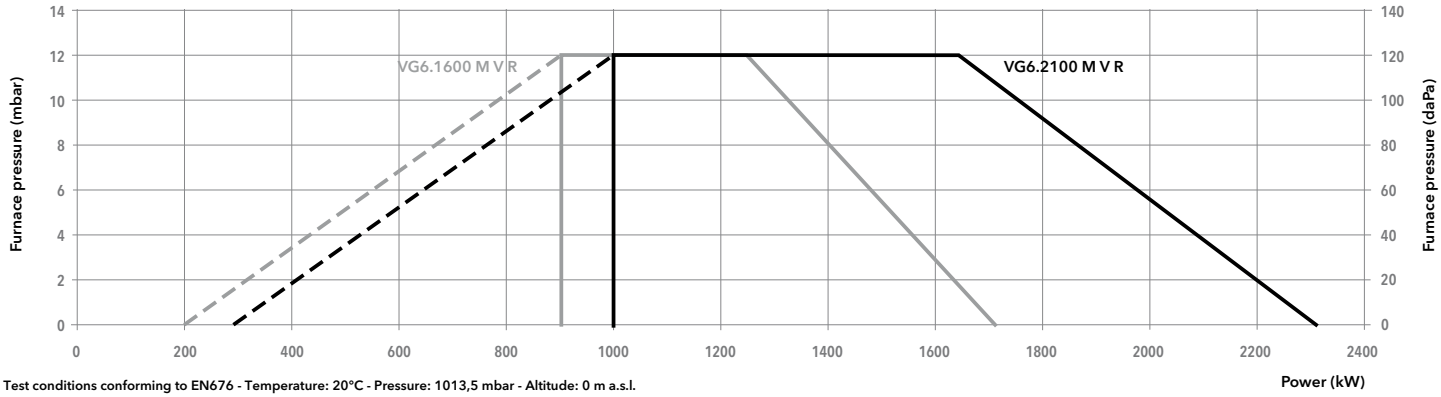

Test conditions conforming to EN676 - Temperature: 20°C - Pressure: 1013,5 mbar - Altitude: 0 m a.s.l.

Model			VG 6.1600 M V R /TC			VG 6.2100 M V R /TC		
Operation range			(200) 900 - 1700 kW			(300) 1000 - 2300 kW		
Gas pressure			50 - 500 mbar			50 - 500 mbar		
Control box / flame detection			BT3... / ionization			BT3... / ionization		
Fan motor			230/400 V - 50 Hz - 2,2 kW			230/400 V - 50 Hz - 2,7 kW		
Electrical consumption			100 + 2500 W			100 + 3500 W		
Acoustic level (LpA)			77 dB(A)			79 dB(A)		
CE certificate			0085 CQ 0570			0085 CQ 0570		
Head lenght			KN	KM	KL	KN	KM	KL
Complete burner code	VGD 40-065	s65-DN65/TC	**3835473**	**3835475**	**3835474**	**3835485**	**3835487**	**3835486**
	MBC1900	d65-DN65/TC	**3835476**	**3835478**	**3835477**	**3835488**	**3835490**	**3835489**
	MBC1200	d2"-Rp2"/TC	**3835479**	**3835481**	**3835480**	**3835491**	**3835493**	**3835492**
	MBC700	d1"1/2-Rp2"/TC	**3835482**	**3835484**	**3835483**	**3835494**	**3835496**	**3835495**

OTHER AVAILABLE VERSIONS

VENT Versions for continuous ventilation and post-ventilation

PED PED version for continuous operation

SCOPE OF SUPPLY

The burner is delivered in its package complete with:
- 1 burner head with flange seal and securing screws
- 1 compact gas train with gas filter; the gas filter is built-in for threaded valves (up to 2") and separated for flanged ones (DN65/80/100)
- 1 bag containing installation fittings
- 1 bag containing technical documentation (instruction manual, technical data, electrical diagram, exploded view and spare parts list)

GEM | Variatron | MDE2 | RTC

DIMENSIONS (mm)

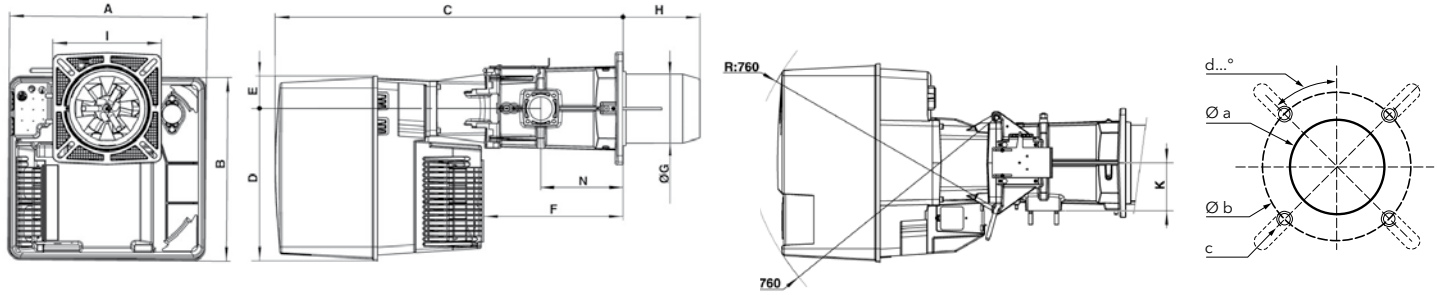

A	B	C	D	E	F	ØG	H			I	K	N
							KN	KM	KL			
592	553	1050	456	97	421	227	270	370	470	326x335	144	247

Øa (mm)	b (mm)	c	d
250	300-400	M12	45°

Gas trains

Gas train "d":

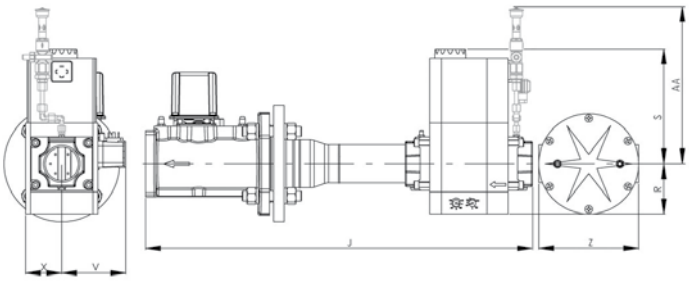

Model	J	R	S	V	X	Z	AA*
d65-DN65	490	183	245	110	98	290	385
d2"-Rp2"	700	96	330	125	81	-	385
d1"1/2-Rp2"	622	80	185	102	57	-	320

Gas train "s":

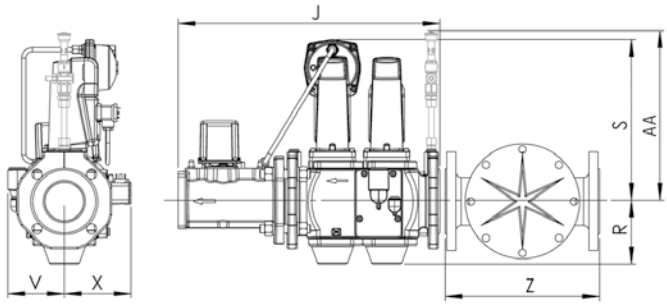

Model	J	R	S	V	X	Z	AA*
s65-DN65	490	118	300	106	126	290	365

***: for PED configuration**

PACKAGING

The burner is delivered on a pallet in 3 packages containing:
- burner housing
- combustion head
- gas train and filter

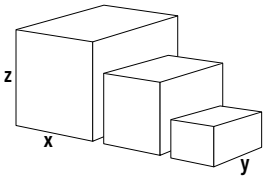

Component		Dimensions (mm)			Gross weight (kg)
		X	Y	Z	
Burner body	VG 6.1600 M V R	800	600	850	67,8
	VG 6.2100 M V R	800	600	850	69,2
Combustion head	KN	1000	380	420	26,7
	KL	1100	380	430	29,4
	KM	1100	380	430	28
Gas train	s65-DN65/TC	670	550	380	29,4
	d65-DN65/TC	670	550	380	33
	d2"-Rp2"/TC	670	550	380	16,5
	d1"1/2-Rp2"/TC	670	550	380	14,3

VG 6.1600 M V R, VG 6.2100 M V R

200 ... 2300 kW
2 stage progressive/modulating electronic + fan speed control

PRESSURE LOSS [BURNER HEAD + GAS TRAIN] (mbar)

VG 6.1600 M V R

Burner output (kW)	Natural gas G20 Hi = 10,35 kWh/m³				Natural gas G25 Hi = 8,83 kWh/m³				LPG G31
	d1"1/2-Rp2"	d2"-Rp2"	d65-DN65	s65-DN65	d1"1/2-Rp2"	d2"-Rp2"	d65-DN65	s65-DN65	d1"1/2-Rp2"
800	17	7	5	6	25	10	8	9	5
1000	25	11	8	9	37	16	11	13	7
1200	36	16	11	13	54	23	16	19	10
1400	49	21	15	17	73	32	22	25	13
1600	64	28	19	22	96	41	29	33	17

Natural gas G20

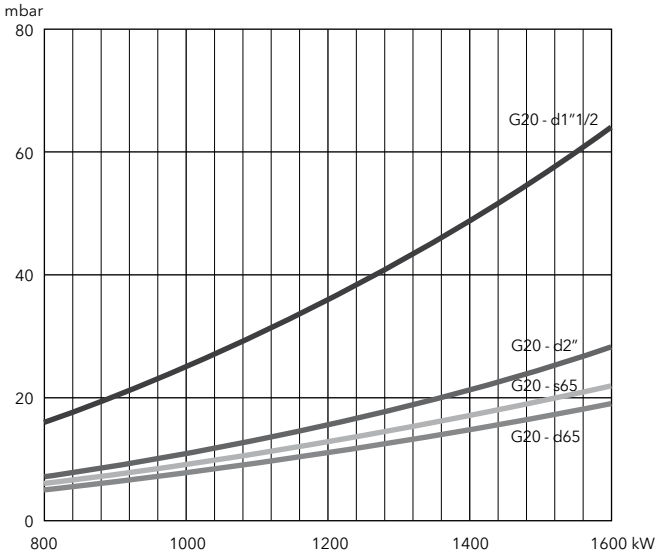

Natural gas G25

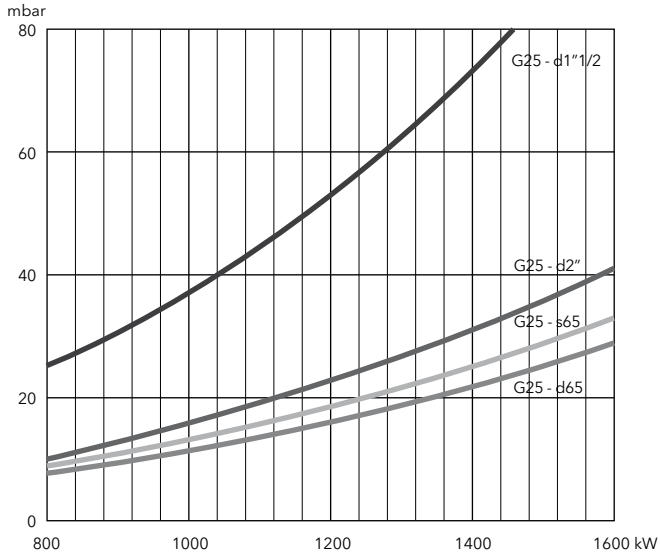

LPG

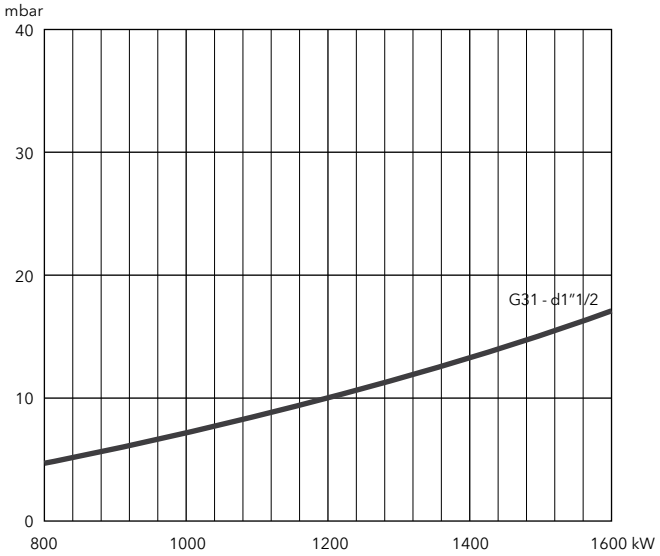

PRESSURE LOSS [BURNER HEAD + GAS TRAIN] (mbar)

VG 6.2100 M V R

Burner output (kW)	Natural gas G20 Hi = 10,35 kWh/m³				Natural gas G25 Hi = 8,83 kWh/m³				LPG G31 Hi = 25,89 kWh/m³	
	d1"1/2-Rp2"	d2"-Rp2"	d65-DN65	s65-DN65	d1"1/2-Rp2"	d2"-Rp2"	d65-DN65	s65-DN65	d1"1/2-Rp2"	d2"-Rp2"
1300	40	16	10	12	60	24	15	18	19	9
1500	53	21	13	16	78	31	20	24	25	11
1700	68	27	17	20	102	40	26	30	32	14
1900	85	34	22	26	127	50	32	38	40	18
2100	104	41	27	31	156	61	40	46	48	22
2300	125	49	32	37	186	73	48	56	58	27

Natural gas G20

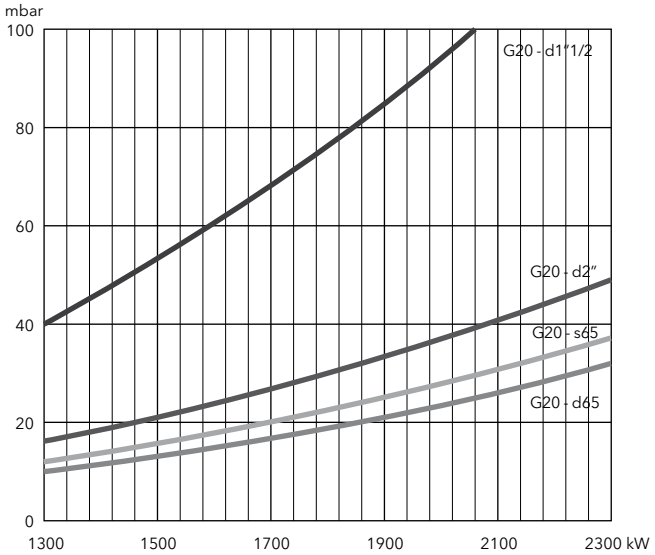

Natural gas G25

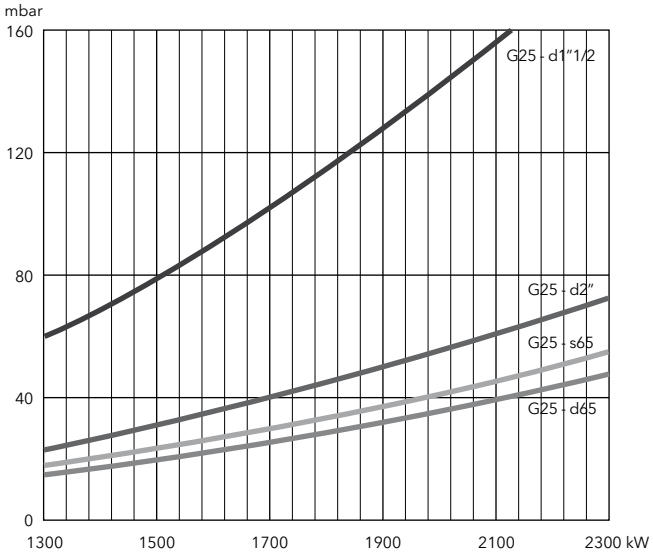

LPG

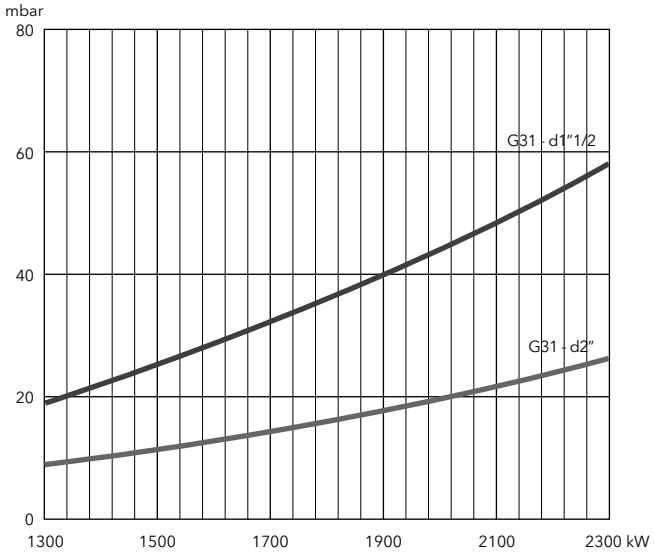

VGL 2.120, VGL 2.210

35 ... 190 kW
1 stage in gas / 1 stage in light oil

- **Fuels:** natural gas (G20/G25, H_u = 8,83…10,35 kWh/m³);
  light oil (viscosity 6 mm²/s at 20°C, H_u = 11,86 kWh/kg)
- **Emission class:** Low NOx class 2 in gas (<120 mg/kWh) according to EN676
  Low NOx class 2 in light oil (<185 mg/kWh) according to EN267
- **Protection level:** IP 21

TECHNICAL DATA

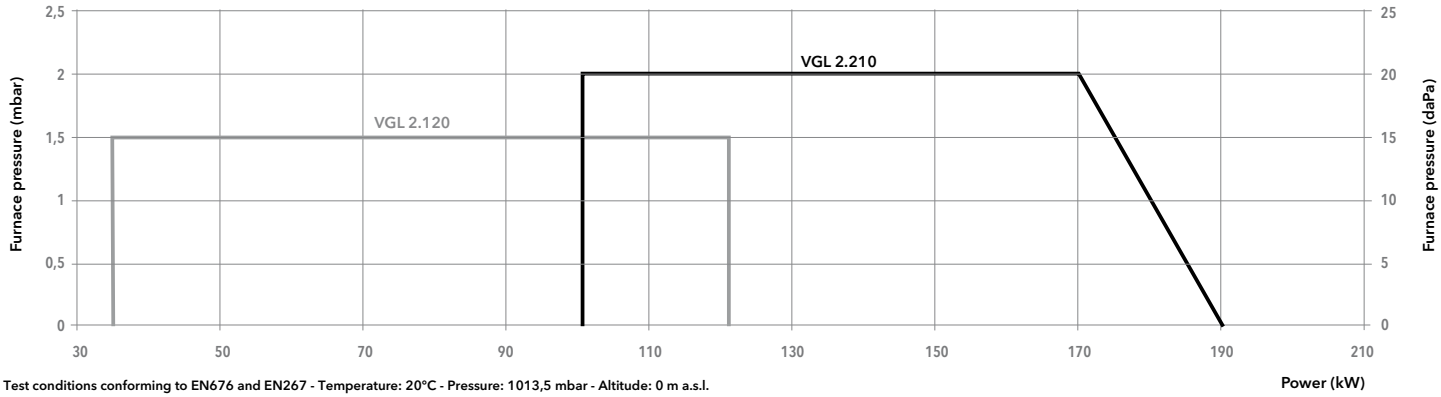

Test conditions conforming to EN676 and EN267 - Temperature: 20°C - Pressure: 1013,5 mbar - Altitude: 0 m a.s.l.

Model	VGL 2.120		VGL 2.210	
Operation range	35 - 120 kW		100 - 190 kW	
Gas pressure	20 - 300 mbar		20 - 300 mbar	
Control box / flame detection	TCG 1... / IRD 1020		TCG 1... / IRD 1020	
Fan motor	230 V - 50 Hz - 160 W		230 V - 50 Hz - 130 W	
Nozzle	1,85 US gal/h 45°S		2,75 US gal/h 45°B	
Electrical consumption	186 W		246 W	
Acoustic level (LpA)	62 dB(A)		65,2 dB(A)	
CE certificate	1312 BU 5219		1312 BU 5219	
Head lenght	KN	KL	KN	KL
Complete burner MB-DLE 407 d3/4"-Rp3/4"	-	**3 833 494**	-	**3 833 495**

OTHER AVAILABLE VERSIONS

VENT Versions for continuous ventilation and post-ventilation

SCOPE OF SUPPLY

The burner is delivered in its package complete with:
- 1 gas connection flange
- 1 compact gas train with gas filter; the gas filter is built-in for threaded valves (up to 2") and separated for flanged ones (DN65/80/100)
- 1 burner flange with insulation
- 1 bag containing installation fittings
- 1 bag containing technical documentation (instruction manual, technical data, electrical diagram, exploded view and spare parts list)

DIMENSIONS (mm)

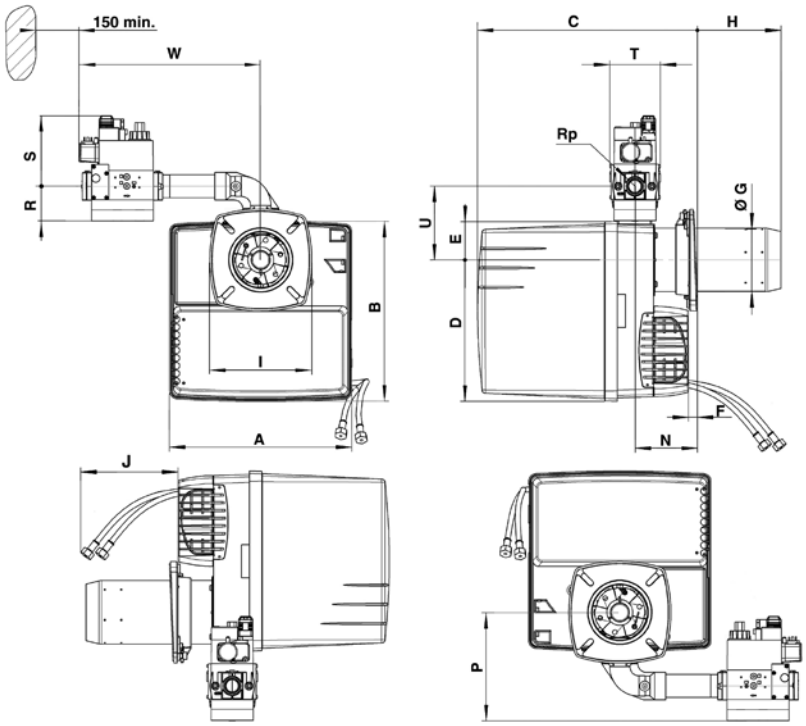

A	B	C	D	E	F min	ØG	H	I	J	N min	P	Rp	R	S	T	U	W
		KL					KL										
331	325	398...638	256	69	15	115	30...270	185	700	113	115	3/4"	46	140	120	133	330

Connecting flange

Øa (mm)	b (mm)	c	d
130-140	172-184	M8	45°

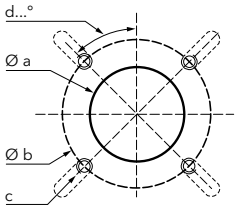

PACKAGING

The burner is delivered in 1 single package containing all components

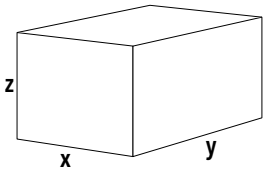

Burner	Dimensions (mm)			Gross weight (kg)
	X	Y	Z	
VGL 2.120	400	400	770	23
VGL 2.210	400	400	770	24

VGL 3.290 D, VGL 3.360 D

95 ... 360 kW
2 stages in gas (Low NOx class 3) / 2 stages in light oil

- **Fuels:** natural gas (G20/G25, H_u = 8,83…10,35 kWh/m³);
  light oil (viscosity 6 mm²/s at 20°C, H_u = 11,86 kWh/kg)
- **Emission class:** Low NOx class 3 in gas (<80 mg/kWh) according to EN676
  Low NOx class 2 in light oil (<185 mg/kWh) according to EN267
- **Protection level:** IP 41

TECHNICAL DATA

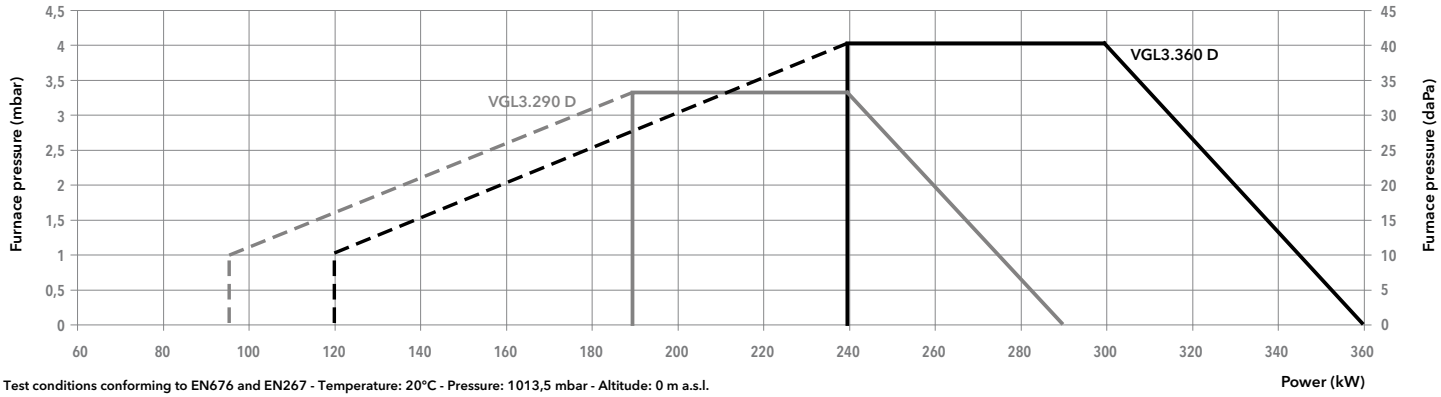

Test conditions conforming to EN676 and EN267 - Temperature: 20°C - Pressure: 1013,5 mbar - Altitude: 0 m a.s.l.

Model		VGL 3.290 D		VGL 3.360 D	
Operation range		(95) 190 - 290 kW		(120) 240 - 360 kW	
Gas pressure		20 - 300 mbar		20 - 300 mbar	
Control box / flame detection		TCG2... / ionization		TCG2... / ionization	
Fan motor		230 V - 50 Hz - 300 W		230 V - 50 Hz - 300 W	
Electrical consumption		512 W		512 W	
Acoustic level (LpA)		67 dB(A)		69 dB(A)	
CE certificate		0085 CP 0304		0085 CP 0304	
Head lenght		KN	KL	KN	KL
Complete burner code	MB-ZRDLE 420 d1"1/2-Rp2"	-	-	**3834467**	**3834468**
	MB-ZRDLE 412 d1"1/4-Rp1"1/4	**3834461**	**3834462**	**3834465**	**3834466**
	MB-ZRDLE 407 d3/4"-Rp3/4"	**3834459**	**3834460**	**3834463**	**3834464**

OTHER AVAILABLE VERSIONS

Vent Versions for continuous ventilation and post-ventilation

SCOPE OF SUPPLY

The burner is delivered in its package complete with:
- 1 burner head with flange seal and securing screws
- 1 compact gas train with gas filter; the gas filter is built-in for threaded valves (up to 2") and separated for flanged ones (DN65/80/100)
- 1 bag containing installation fittings
- 1 bag containing technical documentation (instruction manual, technical data, electrical diagram, exploded view and spare parts list)

MDE2 RTC

DIMENSIONS (mm)

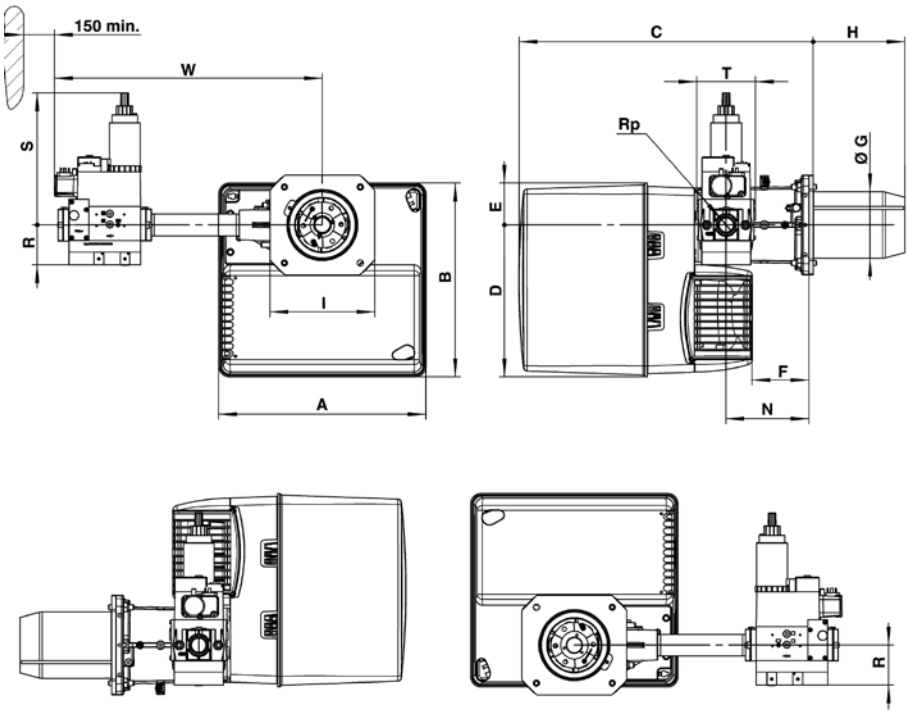

Gas train model	A	B	C	D	E	F	ØG	H		I	N	Rp	R	S	T	W
								KN	KL							
d1"1/2-Rp2"	406	379	576	297	82	120	130	180	320	195x205	170	2"	80	330	100	603
d1"1/4-Rp1"1/4	406	379	576	297	82	120	130	180	320	195x205	170	1"1/4	55	260	145	526
d3/4"-Rp3/4"	406	379	576	297	82	120	130	180	320	195x205	170	3/4"	46	210	120	479

Connecting flange

Øa (mm)	b (mm)	c	d
155-190	175-220	M10	45°

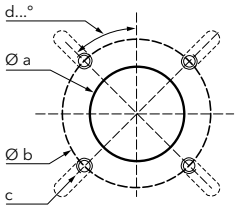

PACKAGING

The burner is delivered on a pallet in 3 packages containing:
- burner housing
- combustion head
- gas train and filter

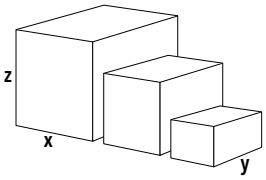

Component		Dimensions (mm)			Gross weight (kg)
		X	Y	Z	
Burner body	VGL 3.290 D	440	400	520	21
	VGL 3.360 D	440	400	520	22
Combustion head	KN	650	210	260	6
	KL	780	210	260	7
Gas train	d1"1/2-Rp2"	600	400	240	14
	d1"1/4-Rp1"1/4	440	320	240	10
	d3/4"-Rp3/4"	440	320	240	7

VGL 3.290 D, VGL 3.360 D

95 ... 360 kW
2 stages in gas (Low NOx class 3) / 2 stages in light oil

PRESSURE LOSS [BURNER HEAD + GAS TRAIN] (mbar)

VGL 3.290 D

Burner output (kW)	Natural gas G20 Hi = 10,35 kWh/m³		Natural gas G25 Hi = 8,83 kWh/m³	
	d3/4"-Rp3/4"	d1"1/4-Rp1"1/4	d3/4"-Rp3/4"	d1"1/4-Rp1"1/4
190	14	6	18	6
210	17	8	22	8
230	20	10	26	10
250	23	11	31	11
270	27	13	37	13
290	32	16	43	16

Natural gas G20

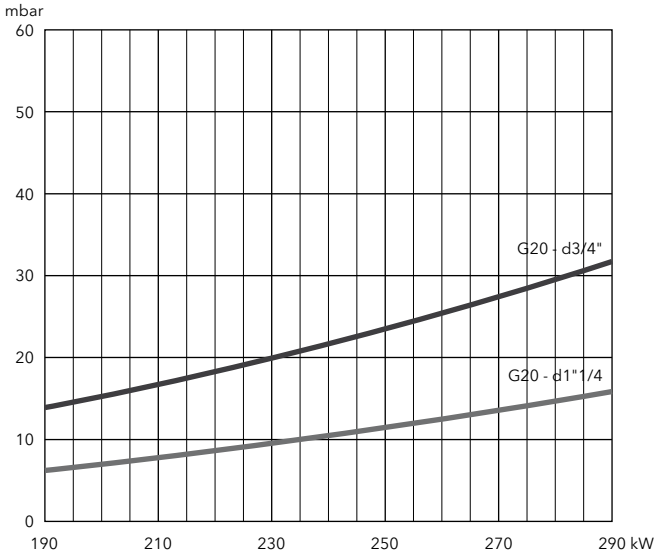

Natural gas G25

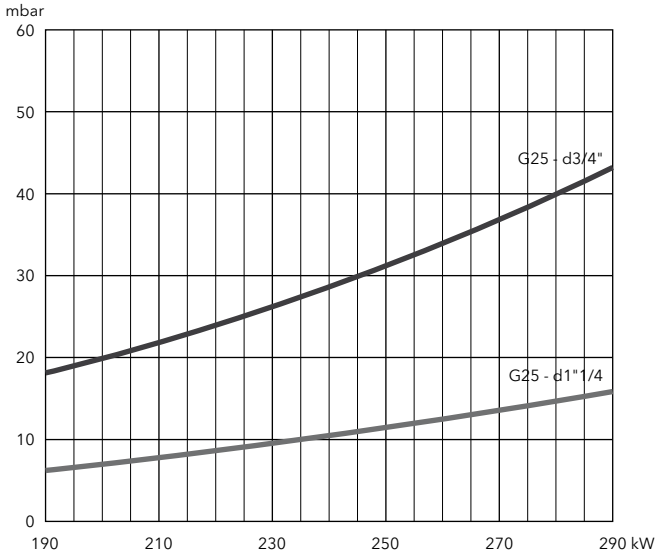

MDE2 RTC

PRESSURE LOSS [BURNER HEAD + GAS TRAIN] (mbar)

VGL 3.360 D

Burner output (kW)	Natural gas G20 Hi = 10,35 kWh/m³		Natural gas G25 Hi = 8,83 kWh/m³		
	d3/4"-Rp3/4"	d1"1/4-Rp1"1/4	d3/4"-Rp3/4"	d1"1/4-Rp1"1/4	d1"1/2-Rp2"
240	22	9	25	9	8
280	29	12	35	12	11
320	38	16	46	16	14
360	49	21	59	21	18

Natural gas G20

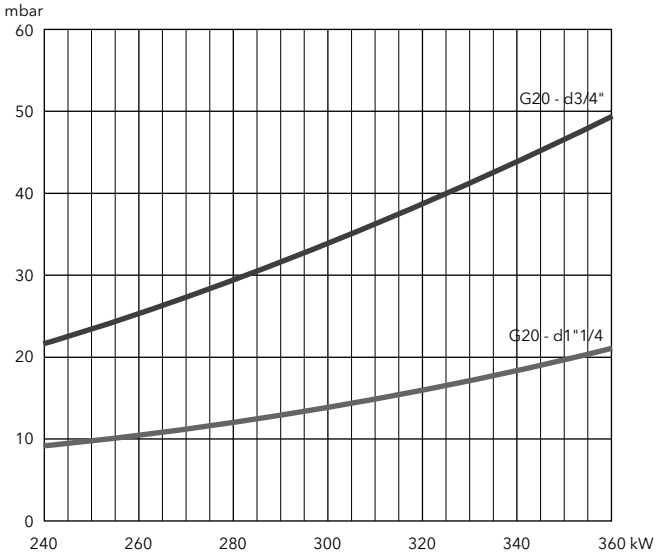

Natural gas G25

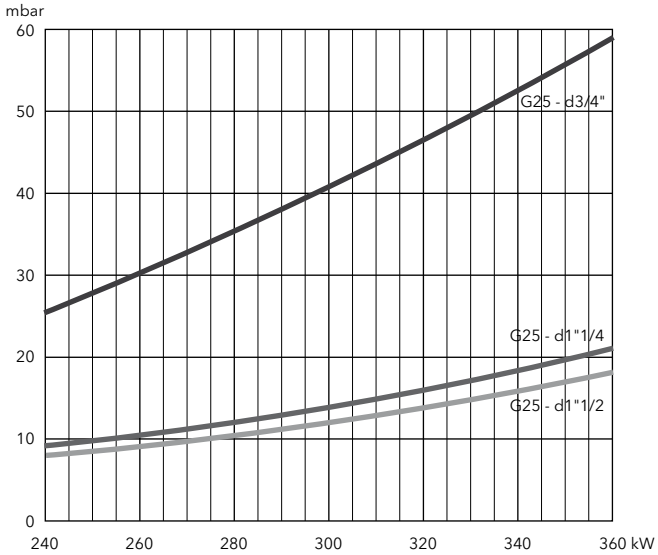

VGL 4.460 DP, VGL 4.610 DP

168 ... 610 kW
2 stages progressive/modulating pneumatic in gas (Low NOx class 3) / 2 stages in oil

- **Fuels:** natural gas (G20/G25, H_u = 8,83…10,35 kWh/m³);
  light oil (viscosity 6 mm²/s at 20°C, H_u = 11,86 kWh/kg)
- **Emission class:** Low NOx class 3 in gas (<80 mg/kWh) according to EN676
  Low NOx class 2 in light oil (<185 mg/kWh) according to EN267
- **Operation:** two stage progressive or modulating with the installation of a power regulator and dedicated probes (see pag. 156) in gas and two stages in light oil
- **Protection level:** IP 41

TECHNICAL DATA

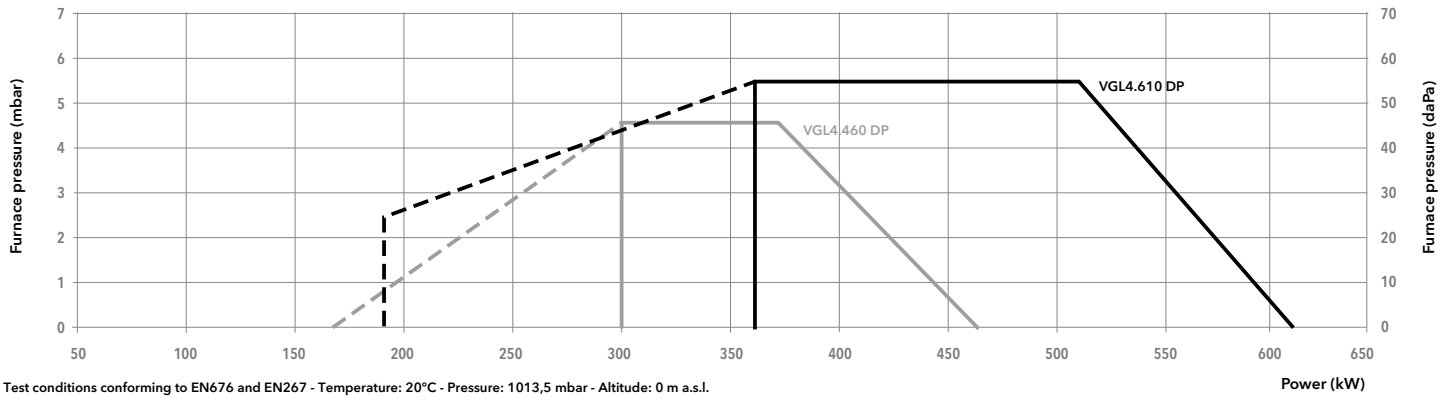

Test conditions conforming to EN676 and EN267 - Temperature: 20°C - Pressure: 1013,5 mbar - Altitude: 0 m a.s.l.

Model		VGL 4.460 DP		VGL 4.610 DP	
Operation range		(168) 300 - 460 kW		(190) 360 - 610 kW	
Gas pressure		20 - 300 mbar		20 - 300 mbar	
Control box / flame detection		TCG5... / ionization		TCG5... / ionization	
Fan motor		230 V - 50 Hz - 420 W		230 V - 50 Hz - 750 W	
Electrical consumption		68 + 522 W		68 + 720 W	
Acoustic level (LpA)		70 dB(A)		71 dB(A)	
CE certificate		0085 CP 0304		0085 CP 0304	
Head lenght		KN	KL	KN	KL
Complete burner code	MB-VEF 420 d1"1/2-Rp2"	**3834576**	**3834577**	**3834582**	**3834583**
	MB-VEF 412 d1"1/4-Rp1"1/4	**3834574**	**3834575**	**3834580**	**3834581**
	MB-VEF 407 d3/4"-Rp1"	**3834572**	**3834573**	**3834578**	**3834579**

OTHER AVAILABLE VERSIONS

Vent Versions for continuous ventilation and post-ventilation

SCOPE OF SUPPLY

The burner is delivered in its package complete with:
- 1 burner head with flange seal and securing screws
- 1 compact gas train with gas filter; the gas filter is built-in for threaded valves (up to 2") and separated for flanged ones (DN65/80/100)
- 1 bag containing installation fittings
- 1 bag containing technical documentation (instruction manual, technical data, electrical diagram, exploded view and spare parts list)

AGP MDE2 RTC LOW NOx CLASS 3

DIMENSIONS (mm)

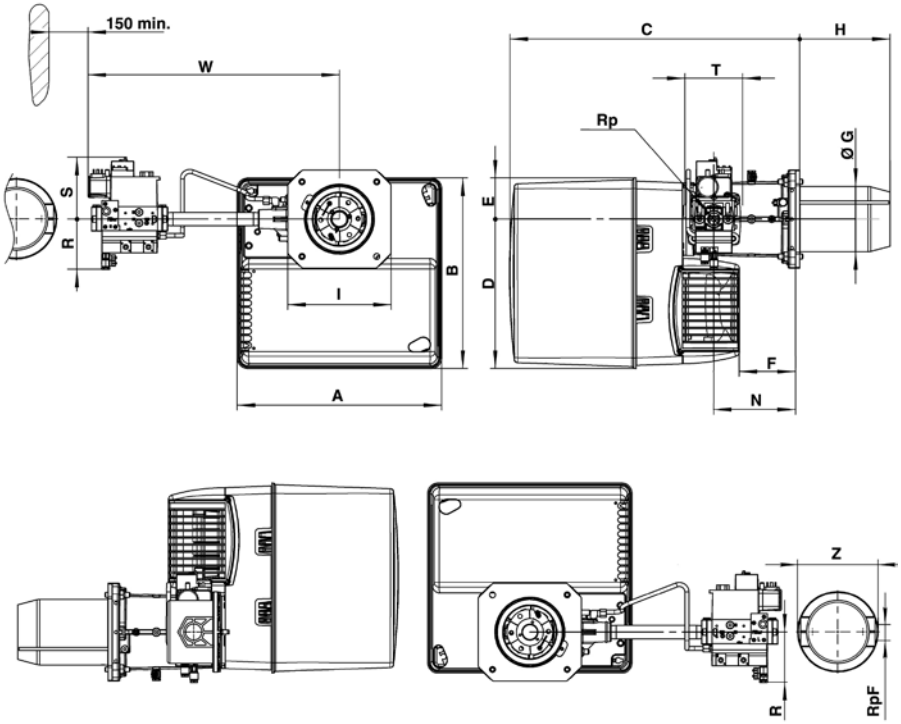

Gas train model	A	B	C	D	E	F	Ø G	H		I	N	Rp	R	S	T	W	RpF	Z
								KN	KL									
d1"1/2-Rp2"	465	475	640	377	97	149	150	220	360	245	195	2"	100	185	100	613	-	-
d1"1/4-Rp1"1/4	465	475	640	377	97	149	150	220	360	245	195	1"1/4	80	175	145	536	-	-
d3/4"-Rp1"	465	475	640	377	97	149	150	220	360	245	195	1"	70	160	120	489	1"	160

Connecting flange

Øa (mm)	b (mm)	c	d
180-240	200-270	M10	45°

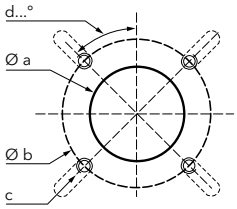

PACKAGING

The burner is delivered on a pallet in 3 packages containing:
- burner housing
- combustion head
- gas train and filter

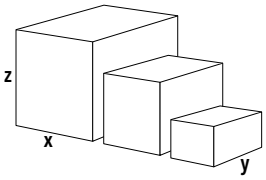

Component		Dimensions (mm)			Gross weight (kg)
		X	Y	Z	
Burner body	VGL 4.460 DP	490	490	590	28,6
	VGL 4.610 DP	490	490	590	32,7
Combustion head	KN	750	260	295	8,9
	KL	895	260	295	10,1
Gas train	d1"1/2-Rp2"	670	550	380	12
	d1"1/4-Rp1"1/4	600	400	240	11
	d3/4"-Rp1"	600	400	240	7

VGL 4.460 DP, VGL 4.610 DP

168 ... 610 kW
2 stages progressive/modulating pneumatic in gas (Low NOx class 3) / 2 stages in oil

PRESSURE LOSS [BURNER HEAD + GAS TRAIN] (mbar)

VGL 4.460 DP

Burner output (kW)	Natural gas G20 Hi = 10,35 kWh/m³		Natural gas G25 Hi = 8,83 kWh/m³		
	d3/4"-Rp3/4"	d1"1/4-Rp1"1/4	d3/4"-Rp3/4"	d1"1/4-Rp1"1/4	d1"1/2-Rp2"
300	37	7	50	13	8
340	47	10	65	17	10
380	59	12	81	21	13
420	72	15	99	26	15
460	86	18	118	31	19

Natural gas G20

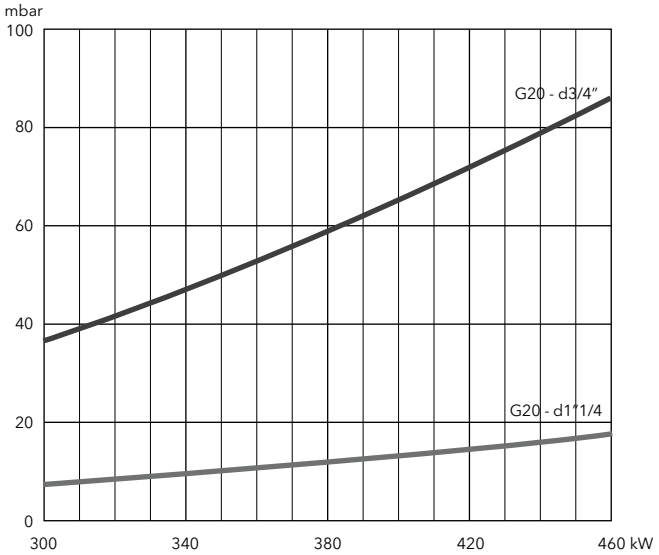

Natural gas G25

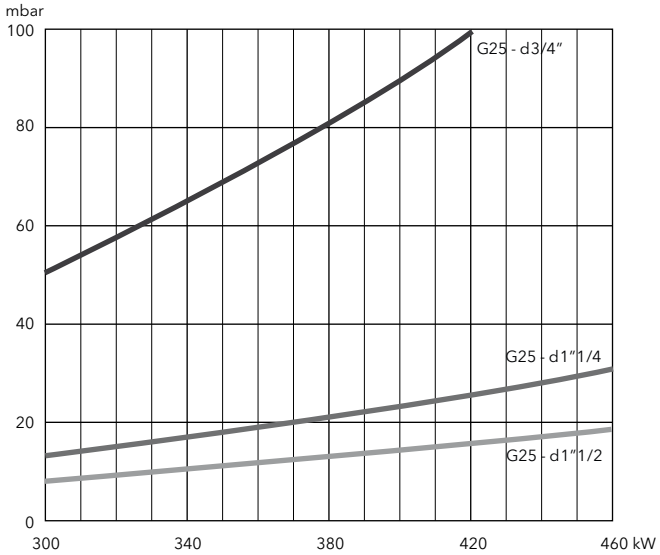

AGP MDE2 RTC LOW NOx CLASS 3

PRESSURE LOSS [BURNER HEAD + GAS TRAIN] (mbar)

VGL 4.610 DP

Burner output (kW)	Natural gas G20 Hi = 10,35 kWh/m³			Natural gas G25 Hi = 8,83 kWh/m³	
	d3/4"-Rp3/4"	d1"1/4-Rp1"1/4	d1"1/2-Rp2"	d1"1/4-Rp1"1/4	d1"1/2-Rp2"
300	51	9	5	12	8
400	91	16	9	21	14
500	142	24	15	33	22
600	204	35	21	48	32

Natural gas G20

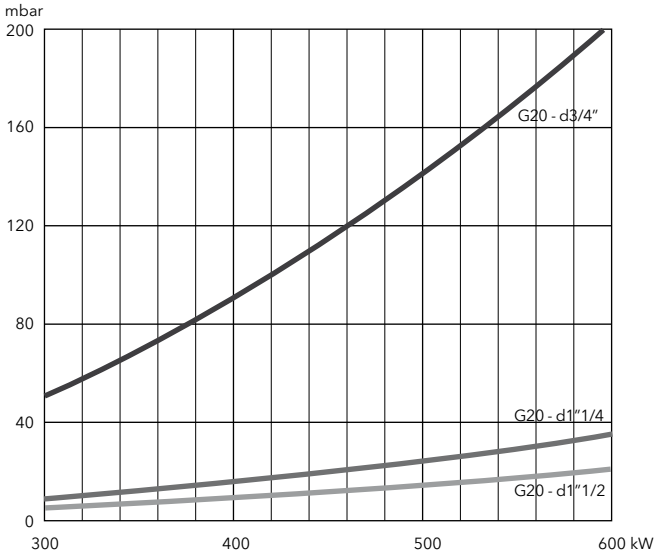

Natural gas G25

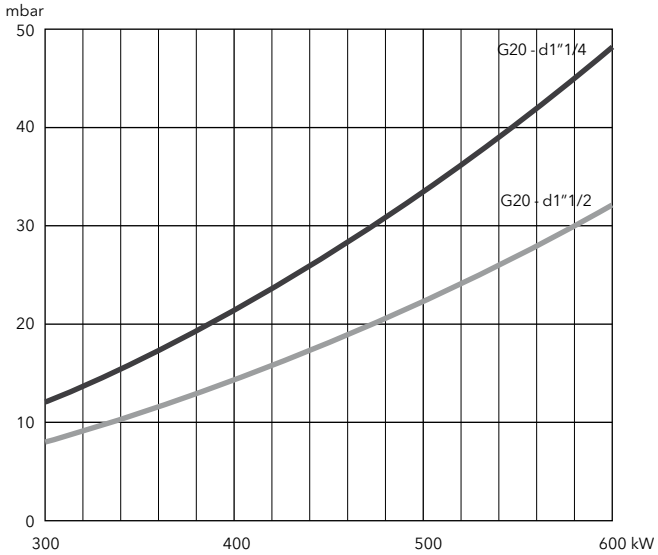

VGL 05.700 DP, VGL 05.1000 DP

200 ... 1000 kW
2 stages progressive/modulating pneumatic in gas (Low NOx class 3) / 3 stages in oil

- **Fuels:** natural gas (G20/G25, H_u = 8,83…10,35 kWh/m³);
  light oil (viscosity 6 mm²/s at 20°C, H_u = 11,86 kWh/kg)
- **Emission class:** Low NOx class 3 in gas (<80 mg/kWh) according to EN676
  Low NOx class 1 in light oil (<250 mg/kWh) according to EN267
- **Operation:** two stage progressive or modulating with the installation of a power regulator and dedicated probes (see pag. 156) in gas and three stages in light oil
- **Protection level:** IP 54

TECHNICAL DATA

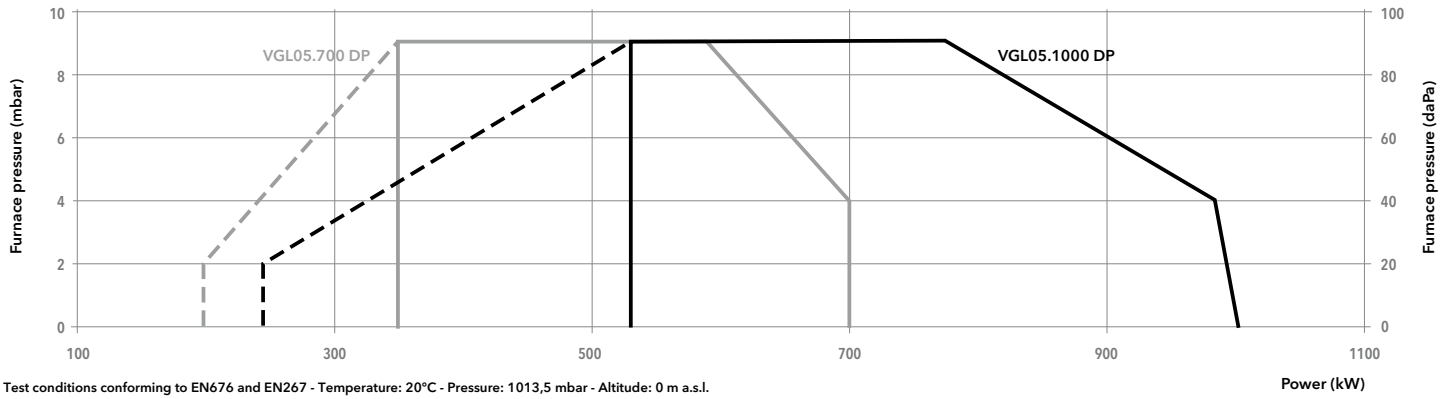

Test conditions conforming to EN676 and EN267 - Temperature: 20°C - Pressure: 1013,5 mbar - Altitude: 0 m a.s.l.

Model			VGL 05.700 DP			VGL 05.1000 DP		
Operation range			(200) 350 - 700 kW			(240) 520 - 1000 kW		
Gas pressure			20 - 300 mbar			20 - 300 mbar		
Control box / flame detection			LFL 1.333 / QRA 2			LFL 1.333 / QRA 2		
Fan motor			230/400 V - 50 Hz - 1,1 kW			230/400 V - 50 Hz - 1,5 kW		
Nozzle			4,5 US gal/h 45°B / 5 US gal/h 45°B			5 US gal/h 45°B / 8,5 US gal/h 45°B		
Electrical consumption			2000 W			2200 W		
Acoustic level (LpA)			75,4 dB(A)			77,6 dB(A)		
CE certificate			1312 AQ 924			1312 AQ 925		
Head lenght			KN	KL	KM	KN	KL	KM
Complete burner code	VGD 40-065	s65-DN65	-	-	-	**3832983**	**3832984**	**3832985**
	VGD 20-5011	s2"-Rp2"	**3832980**	**3832981**	**3832982**	**3832986**	**3832987**	**3832988**
	MB-VEF 420	d1"1/2-Rp2"	**13004136**	**13004137**	**13004138**	**13004869**	**13004870**	**13004871**
	MB-VEF 412	d1"1/4-Rp2"	**13001930**	**13001931**	**13001932**	**13001936**	**13001937**	**13001938**
	MB-VEF 407	d3/4"-Rp1"	**13014772**	**13014773**	**13014774**	**13014775**	**13014776**	**13014777**

OTHER AVAILABLE VERSIONS

Vent Versions for continuous ventilation and post-ventilation

SCOPE OF SUPPLY

The burner is delivered in its package complete with:
- 1 burner head with flange seal and securing screws
- 1 compact gas train with gas filter; the gas filter is built-in for threaded valves (up to 2") and separated for flanged ones (DN65/80/100)
- 1 bag containing installation fittings
- 1 bag containing technical documentation (instruction manual, technical data, electrical diagram, exploded view and spare parts list)

AGP RTC LOW NOx CLASS 3

DIMENSIONS (mm)

with gas train "**d**":

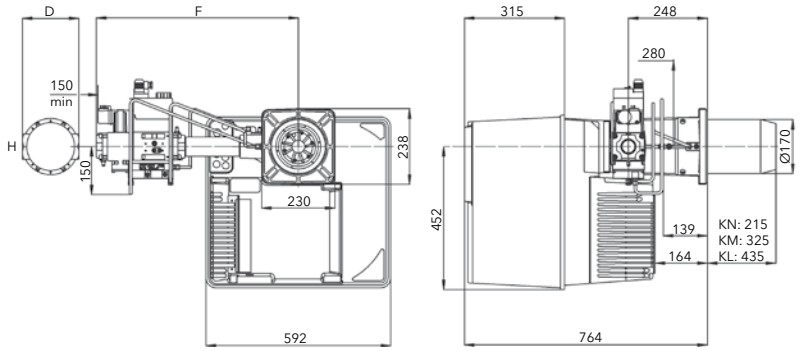

D	F	H	Rp
120	516	3/4"	1"
177	540	1"1/4	2"
-	635	1"1/2	2"

with gas train "**s**":

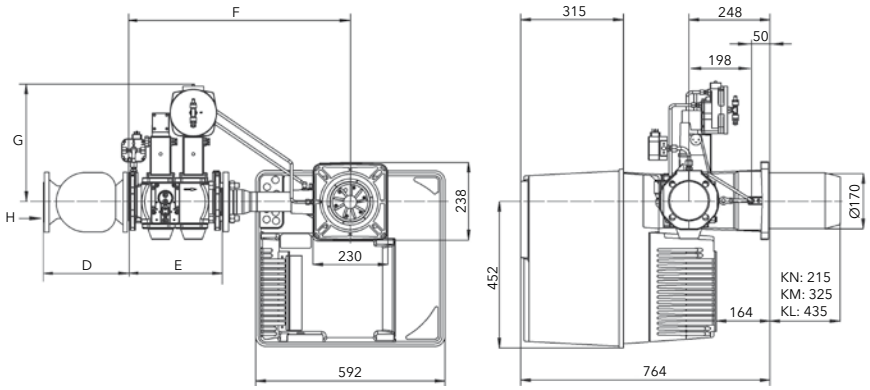

D	E	F	G	H
186	292	734	344	2"
290	292	740	365	DN65

Øa (mm)	b (mm)	c	d
172-195	220-260	M10	45°

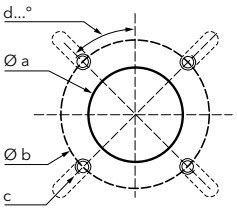

PACKAGING

The burner is delivered on a pallet in 3 packages containing:

- burner housing
- combustion head
- gas train and filter

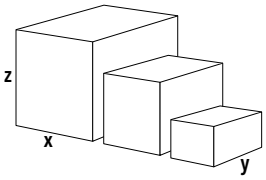

Component		Dimensions (mm)			Gross weight (kg)
		X	Y	Z	
Burner body	VGL 05.700 DP	800	600	850	70
	VGL 05.1000 DP	800	600	850	67
Combustion head	KN	780	265	280	13
	KL	1010	265	280	16
	KM	1010	270	280	15
Gas train	s65-DN65	790	600	500	30
	s2"-Rp2"	790	600	500	18
	d1"1/2-Rp2"	670	550	380	14
	d1"1/4-Rp2"	600	400	240	11
	d3/4"-Rp1"	590	410	240	8

VGL 06.1600 DP, VGL 06.2100 DP

300 ... 2050 kW
2 stages progressive/modulating pneumatic in gas (Low NOx class 3) / 3 stages in oil

- **Fuels:** natural gas (G20/G25, H_u = 8,83…10,35 kWh/m³);
  light oil (viscosity 6 mm²/s at 20°C, H_u = 11,86 kWh/kg)
- **Emission class:** Low NOx class 3 in gas (<80 mg/kWh) according to EN676
  Low NOx class 1 in light oil (<250 mg/kWh) according to EN267
- **Operation:** two stage progressive or modulating with the installation of a power regulator and dedicated probes (see pag. 156) in gas and three stages in light oil
- **Protection level:** IP 54

TECHNICAL DATA

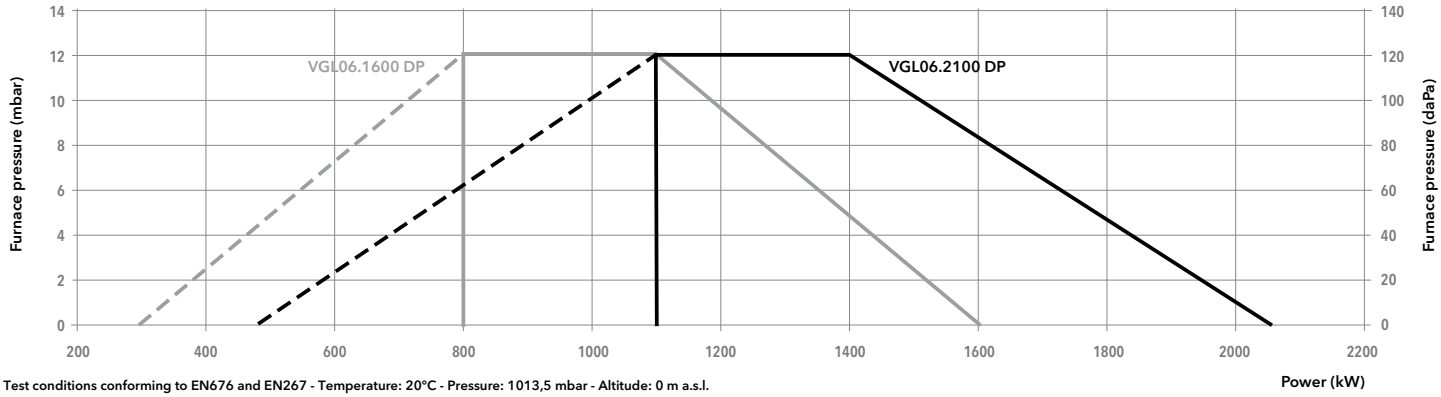

Test conditions conforming to EN676 and EN267 - Temperature: 20°C - Pressure: 1013,5 mbar - Altitude: 0 m a.s.l.

Model			VGL 06.1600 DP			VGL 06.2100 DP		
Operation range			(300) 800 - 1600 kW			(480) 1100 - 2050 kW		
Gas pressure			20 - 300 mbar			20 - 300 mbar		
Control box / flame detection			LFL 1.333 / QRA 2			LFL 1.333 / QRA 2		
Fan motor			230/400 V - 50 Hz - 2,2 kW			230/400 V - 50 Hz - 2,5 kW		
Nozzle			8,50 US gal/h 60°B / 2 x 7,50 US gal/h 60°B			13,50 US gal/h 60°B / 2 x 11,00 US gal/h 60°B		
Electrical consumption			2840 W			3380 W		
Acoustic level (LpA)			78,8 dB(A)			80 dB(A)		
CE certificate			1312 BM 3427			1312 BM 3428		
Head lenght			KN	KL	KM	KN	KL	KM
Complete burner code	VGD 40-080	s80-DN80	**3832995**	**3832996**	**3832997**	**3832998**	**3832999**	**3832000**
	VGD 40-065	s65-DN65	**13014890**	**13014891**	**13014892**	**13016833**	**13016834**	**13016835**
	VGD 20-5011	s2"-Rp2"	**13016827**	**13016828**	**13016829**	**13016830**	**13016831**	**13016832**
	MB-VEF 420	d1"1/2-Rp2"	**13007340**	**13007341**	**13007342**	**13007343**	**13007344**	**13007345**
	MB-VEF 412	d1"1/4-Rp2"	**13015105**	**13015106**	**13015107**	**13015108**	**13015109**	**13015110**

OTHER AVAILABLE VERSIONS

Vent Versions for continuous ventilation and post-ventilation

SCOPE OF SUPPLY

The burner is delivered in its package complete with:
- 1 burner head with flange seal and securing screws
- 1 compact gas train with gas filter; the gas filter is built-in for threaded valves (up to 2") and separated for flanged ones (DN65/80/100)
- 1 bag containing installation fittings
- 1 bag containing technical documentation (instruction manual, technical data, electrical diagram, exploded view and spare parts list)

AGP RTC LOW NOx CLASS 3

DIMENSIONS (mm)

with gas train "**d**":

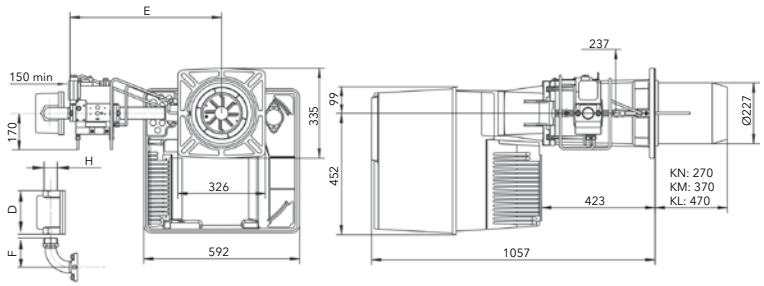

D	E	F	Rp	H
-	590	107	1"1/2	-
160	690	-	1"1/4	2"

with gas train "**s**":

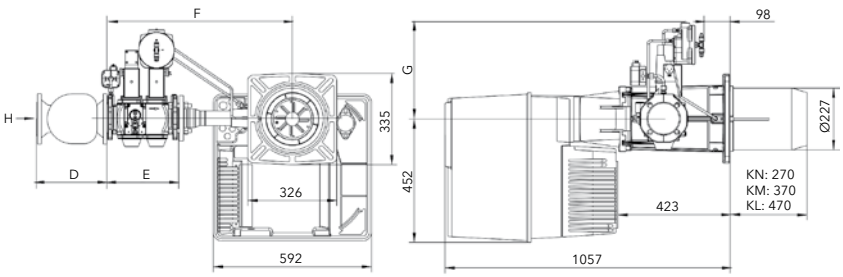

D	E	F	G	H
186	292	734	344	2"
290	292	740	365	DN65
320	312	746	375	DN80

Øa (mm)	b (mm)	c	d
250	300-400	M12	45°

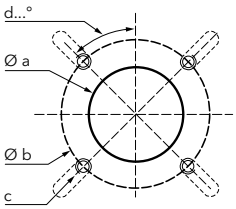

PACKAGING

The burner is delivered on a pallet in 3 packages containing:

- burner housing
- combustion head
- gas train and filter

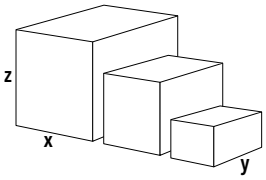

Component		Dimensions (mm)			Gross weight (kg)
		X	Y	Z	
Burner body	VGL 06.1600 DP	800	600	850	85
	VGL 06.2100 DP	800	600	850	85
Combustion head	KN	800	380	420	28
	KL	800	380	420	31
	KM	800	380	420	31
Gas train	s80-DN80	790	600	500	39
	s65-DN65	790	600	500	31
	s2"-Rp2"	790	600	500	20
	d1"1/2-Rp2"	670	550	380	14
	d1"1/4-Rp2"	670	550	380	14

VB 1.20, VB 1.24, VB 1.28, VB 1.30, VB 1.35

11 ... 35 kW
1 stage (Low NOx class 3, Blue flame)

- **Fuel:** light oil (viscosity 6 mm²/s at 20°C, H_u = 11,86 kWh/kg)
- **Emission class:** Low NOx class 3 (<120 mg/kWh) according to EN267
- **Protection level:** IP 21

TECHNICAL DATA

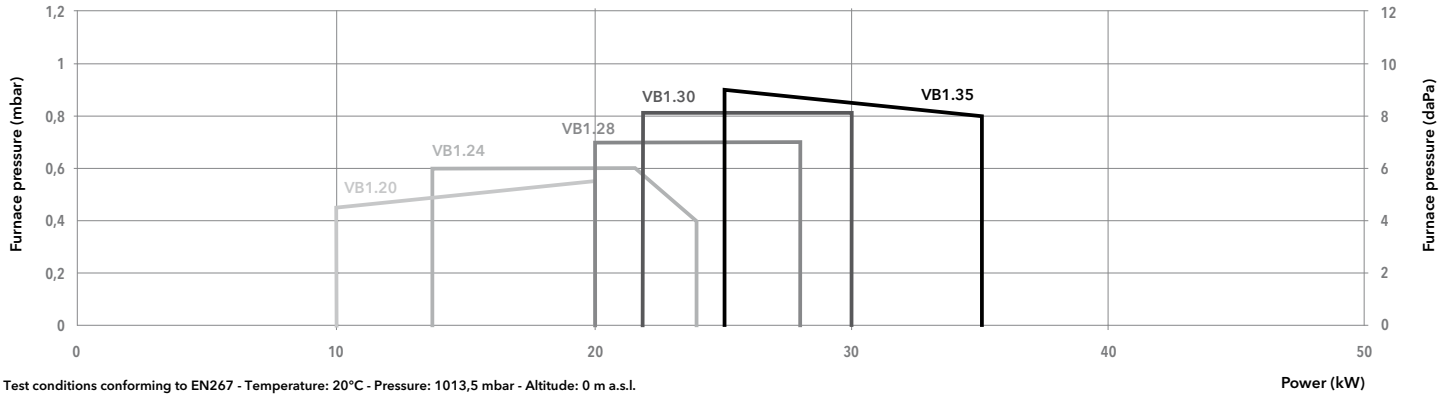

Test conditions conforming to EN267 - Temperature: 20°C - Pressure: 1013,5 mbar - Altitude: 0 m a.s.l.

Model	VB 1.20		VB 1.24		VB 1.28		VB 1.30		VB 1.35	
Operation range	11 - 20 kW		14 - 24 kW		20 - 28 kW		22 - 30 kW		25 - 35 kW	
Fuel flow	0,9 - 1,7 kg/h		1,2 - 2,0 kg/h		1,7 - 2,4 kg/h		1,9 - 2,5 kg/h		2,1 - 3,0 kg/h	
Nozzle	0,40 US gal/h 60°S		0,45 US gal/h 60°S		0,50 US gal/h 80°S		0,55 US gal/h 80°S		0,60 US gal/h 80°S	
Control box / flame detection	TCH 141.03 / IRD 1010		TCH 141.03 / IRD 1010		TCH 141.03 / IRD 1010		TCH 141.03 / IRD 1010		TCH 141.03 / IRD 1010	
Fan motor	230 V - 50 Hz - 110 W		230 V - 50 Hz - 110 W		230 V - 50 Hz - 110 W		230 V - 50 Hz - 110 W		230 V - 50 Hz - 110 W	
Electrical consumption	207 W		207 W		207 W		207 W		207 W	
Flexible hoses	Rp 3/8" / M14 x 1,5 - 1000 mm									
Acoustic level (LpA)	59 dB(A)		59 dB(A)		59 dB(A)		59 dB(A)		59 dB(A)	
Head lenght	KN	KL	KN	KL	KN	KL	KN	KL	KN	KL
Complete burner code	**3832624**	-	**3832625**	-	**3832626**	-	**3832627**	-	**3832628**	-

OTHER AVAILABLE VERSIONS

Vent Versions for continuous ventilation and post-ventilation

SCOPE OF SUPPLY

The burner is delivered in its package complete with:
- 1 setting template
- 1 burner flange with insulation
- 1 bag containing installation fittings
- 1 bag containing technical documentation (instruction manual, technical data, electrical diagram, exploded view and spare parts list)

MDE2 RTC LOW NOx CLASS 3

DIMENSIONS (mm)

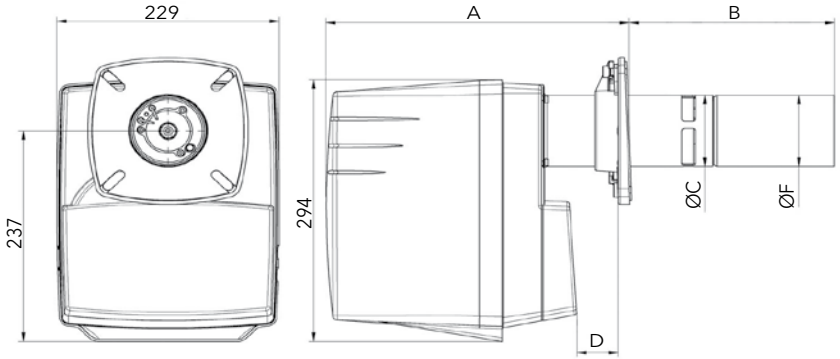

Model	A		B		ØC	D		ØF
	min	max	min	max		min	max	
VB 1.20	269	284	234	249	80	12	27	80
VB 1.24	269	284	234	249	80	12	27	80
VB 1.28	269	284	234	249	80	12	27	100
VB 1.30	269	284	244	259	80	12	27	100
VB 1.35	269	284	294	309	80	12	27	120

Connecting flange

Øa (mm)	b (mm)	c	d
85-104	150-170	M8	45°

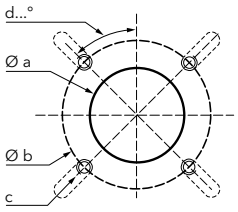

PACKAGING

The burner is delivered in 1 single package containing all components

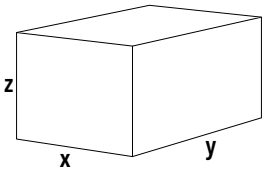

Burner	Dimensions (mm)			Gross weight (kg)
	X	Y	Z	
VB 1.20	300	260	650	12
VB 1.24	300	260	650	12
VB 1.28	300	260	650	12
VB 1.30	300	260	650	12
VB 1.35	300	260	650	12

VE 1.34, VE 1.50, VE 1.75

16 ... 75 kW
1 stage (Low NOx class 3, Yellow flame)

- **Fuel:** light oil (viscosity 6 mm²/s at 20°C, H_u = 11,86 kWh/kg)
- **Emission class:** Low NOx class 3 (<120 mg/kWh) according to EN267
- **Protection level:** IP 21

TECHNICAL DATA

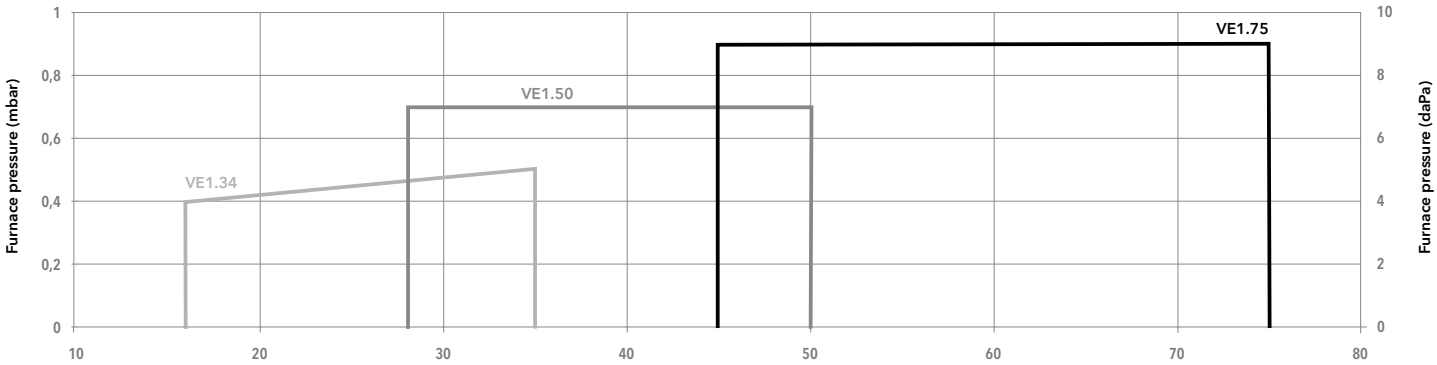

Test conditions conforming to EN267 - Temperature: 20°C - Pressure: 1013,5 mbar - Altitude: 0 m a.s.l.

Power (kW)

Model	VE 1.34		VE 1.50		VE 1.75	
Operation range	16 - 34 kW		28 - 50 kW		44 - 75 kW	
Fuel flow	1,3 - 2,8 kg/h		2,4 - 4,2 kg/h		3,7 - 6,3 kg/h	
Nozzle	0,45 US gal/h 45°S		0,75 US gal/h 45°S		1,10 US gal/h 45°H	
Control box / flame detection	TCH 141.03 / QRB1		TCH 141.03 / QRB1		TCH 141.00 / QRB1	
Fan motor	230 V - 50 Hz - 110 W		230 V - 50 Hz - 110 W		230 V - 50 Hz - 110 W	
Electrical consumption	244 W		244 W		233 W	
Flexible hoses	Rp 3/8" / M14 x 1,5 - 1000 mm		Rp 3/8" / M14 x 1,5 - 1000 mm		Rp 3/8" / M14 x 1,5 - 1000 mm	
Acoustic level (LpA)	56 dB(A)		56 dB(A)		56 dB(A)	
Head lenght	KN	KL	KN	KL	KN	KL
Complete burner code	**3832630**	-	**3832632**	-	**3832634**	-

OTHER AVAILABLE VERSIONS

VENT Versions for continuous ventilation and post-ventilation

SCOPE OF SUPPLY

The burner is delivered in its package complete with:
- 1 setting template
- 1 burner flange with insulation
- 1 bag containing installation fittings
- 1 bag containing technical documentation (instruction manual, technical data, electrical diagram, exploded view and spare parts list)

MDE2 RTC LOW NOx CLASS 3

DIMENSIONS (mm)

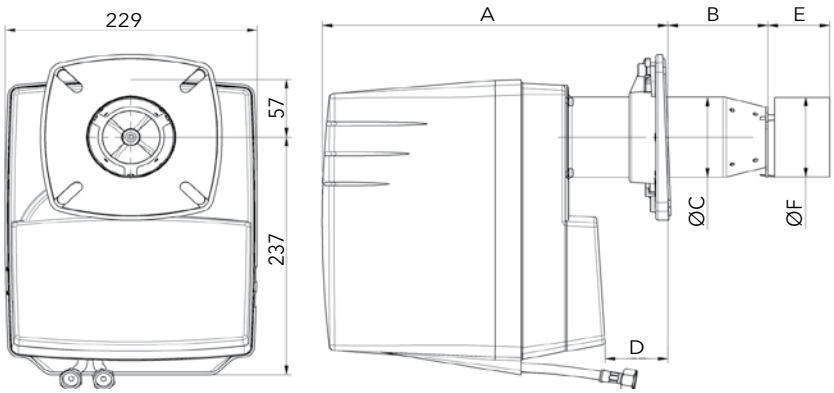

	A	B	ØC	D	E	ØF
VE 1.34	264 ... 329	70 ... 135	80	12 ... 77	63	79
VE 1.50	264 ... 344	70 ... 150	90	12 ... 92	56	84
VE 1.75	297 ... 357	70 ... 138	90	15 ... 83	56	84

Connecting flange

Øa (mm)	b (mm)	c	d
95-104	150-170	M8	45°

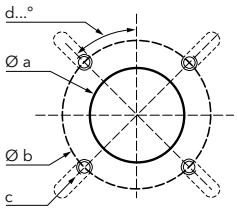

PACKAGING

The burner is delivered in 1 single package containing all components

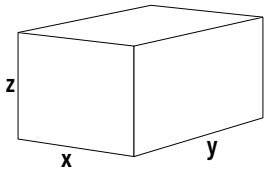

Burner	Dimensions (mm)			Gross weight (kg)
	X	Y	Z	
VE 1.34	300	260	650	11
VE 1.50	300	260	650	11
VE 1.75	300	260	650	12

VL 1.40 P, VL 1.55 P, VL 1.42, VL 1.55, VL 1.95

18 ... 95 kW
1 stage

- **Fuel:** light oil (viscosity 6 mm²/s at 20°C, H_u = 11,86 kWh/kg)
- **Emission class:** Low NOx class 2 (<185 mg/kWh) according to EN267
- **Protection level:** IP 21

TECHNICAL DATA

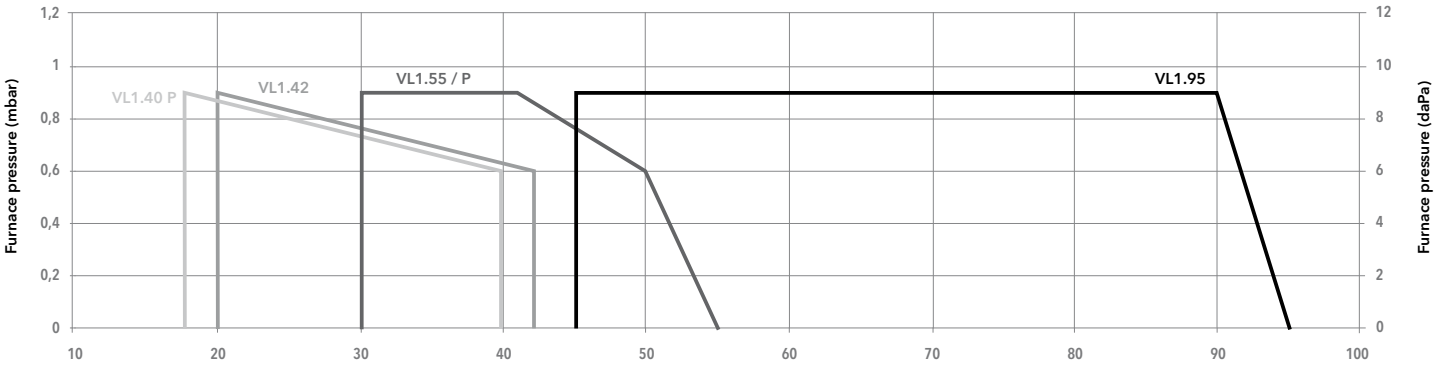

Test conditions conforming to EN267 - Temperature: 20°C - Pressure: 1013,5 mbar - Altitude: 0 m a.s.l.

Power (kW)

Model	VL 1.40 P		VL 1.55 P		VL 1.42		VL 1.55		VL 1.95	
Operation range	18 - 40 kW (pre-heater)		30 - 55 kW (pre-heater)		20 - 42 kW		30 - 55 kW		45 - 95 kW	
Fuel flow	1,5 - 3,3 kg/h		2,5 - 4,6 kg/h		1,7 - 3,5 kg/h		2,5 - 4,6 kg/h		3,8 - 8 kg/h	
Nozzle	0,50 US gal/h 60°S		1,00 US gal/h 45°S		0,60 US gal/h 60°S		1,00 US gal/h 45°S		1,25 US gal/h 45°S	
Control box / flame detection	TCH 141.03 / QRB1		TCH 141.03 / QRB1		TCH 141.03 / QRB1		TCH 141.03 / QRB1		TCH 141.03 / QRB1	
Fan motor	230 V - 50 Hz - 110 W		230 V - 50 Hz - 110 W		230 V - 50 Hz - 110 W		230 V - 50 Hz - 110 W		230 V - 50 Hz - 110 W	
Electrical consumption	244 W		244 W		195 W		195 W		233 W	
Flexible hoses	Rp 3/8" / M14 x 1,5 - 1000 mm									
Acoustic level (LpA)	55 dB(A)		55 dB(A)		55 dB(A)		55 dB(A)		60,5 dB(A)	
Head lenght	KN	KL	KN	KL	KN	KL	KN	KL	KN	KL
Complete burner code	**3832615**	-	**3833026**	-	**3832616**	-	**3832617**	-	**3832618**	-

OTHER AVAILABLE VERSIONS

VENT Versions for continuous ventilation and post-ventilation

SCOPE OF SUPPLY

The burner is delivered in its package complete with:
- 1 burner flange with insulation
- 1 bag containing installation fittings
- 1 bag containing technical documentation (instruction manual, technical data, electrical diagram, exploded view and spare parts list)

MDE2 RTC

DIMENSIONS (mm)

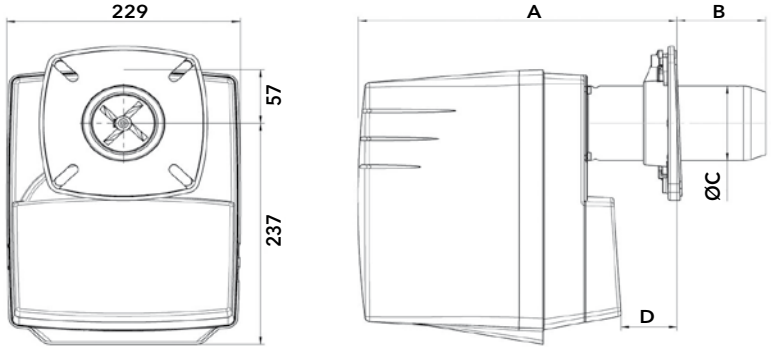

	A		B		ØC	D	
	min	max	min	max		min	max
VL 1.40 P	270	310	70	120	80	21	71
VL 1.42	270	310	70	120	80	21	71
VL 1.55	270	310	70	120	80	21	71
VL 1.55 P	270	310	70	120	80	21	71
VL 1.95	297	357	70	138	90	15	83

Connecting flange

Model	Øa (mm)	b (mm)	c	d
VL 1.40/55	85-104	150-170	M8	45°
VL 1.95	95-104	150-170	M8	45°

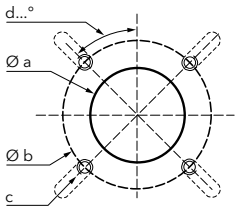

PACKAGING

The burner is delivered in 1 single package containing all components

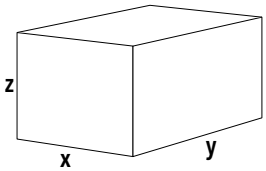

Burner	Dimensions (mm)			Gross weight (kg)
	X	Y	Z	
VL 1.40 P	300	260	650	11
VL 1.42	300	260	650	11
VL 1.55	300	260	650	11
VL 1.55 P	300	260	650	11
VL 1.95	300	260	650	12

VL 2.140, VL 2.200

80 ... 200 kW
1 stage

- **Fuel:** light oil (viscosity 6 mm²/s at 20°C, H_u = 11,86 kWh/kg)
- **Emission class:** Low NOx class 2 (<185 mg/kWh) according to EN267
- **Protection level:** IP 21

TECHNICAL DATA

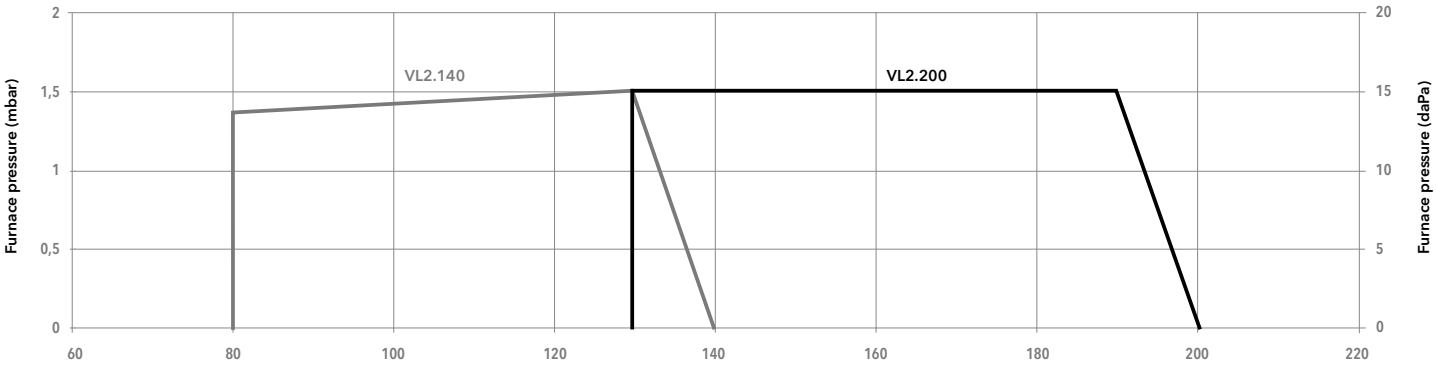

Test conditions conforming to EN267 - Temperature: 20°C - Pressure: 1013,5 mbar - Altitude: 0 m a.s.l.

Power (kW)

Model	VL 2.140		VL 2.200	
Operation range	80 - 140 kW		130 - 200 kW	
Fuel flow	6,7 - 11,8 kg/h		11 - 16,9 kg/h	
Nozzle	2,25 US gal/h 45°S		3,50 US gal/h 45°S	
Control box / flame detection	TCH1... / QRB1		TCH1... / QRB1	
Fan motor	230 V - 50 Hz - 160 W		230 V - 50 Hz - 130 W	
Electrical consumption	274 W		290 W	
Flexible hoses	Rp 3/8" / DN6 x 1,5 - 1500 mm		Rp 3/8" / DN6 x 1,5 - 1500 mm	
Acoustic level (LpA)	62 dB(A)		65 dB(A)	
Head lenght	KN	KL	KN	KL
Complete burner code	**3833536**	**3833537**	**3833540**	**3833541**

OTHER AVAILABLE VERSIONS

Vent Versions for continuous ventilation and post-ventilation

SCOPE OF SUPPLY

The burner is delivered in its package complete with:
- 2 oil hoses
- 1 burner flange with insulation
- 1 bag containing installation fittings
- 1 bag containing technical documentation (instruction manual, technical data, electrical diagram, exploded view and spare parts list)

DIMENSIONS (mm)

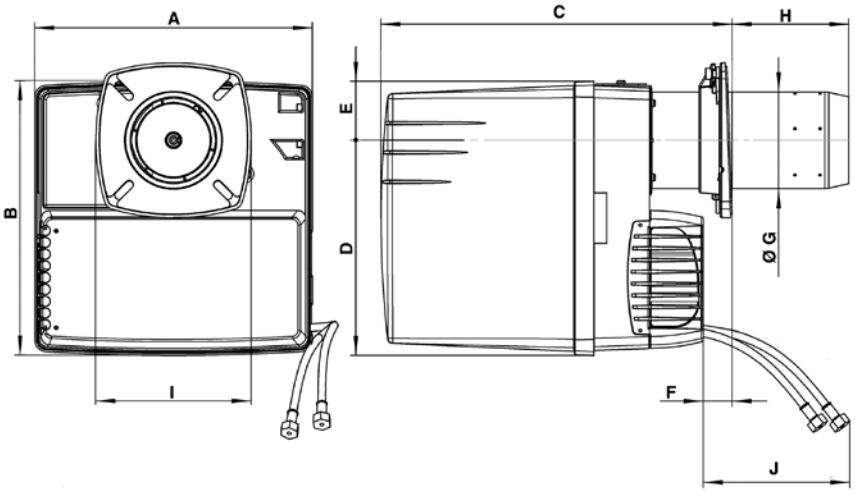

	A	B	C		D	E	F min	ØG	H		I	J
			KN	KL					KN	KL		
VL2.140	331	325	398…518	398…638	256	69	15	100	30…150	30…270	185	1200
VL2.200	331	325	398…518	398…638	256	69	15	115	30…150	30…270	185	1200

Connecting flange

Øa (mm)	b (mm)	c	d
120-135	150-184	M8	45°

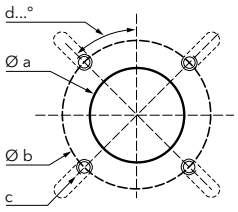

PACKAGING

The burner is delivered in 1 single package containing all components

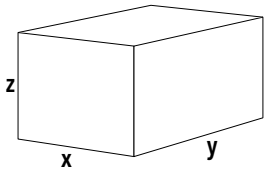

Burner	Dimensions (mm)			Gross weight (kg)
	X	Y	Z	
VL 2.140	400	400	760	18
VL 2.200	400	400	760	18

VE 2.100 D, VE 2.150 D

50 ... 150 kW
2 stages (Low NOx class 3, Yellow flame)

- **Fuel:** light oil (viscosity 6 mm²/s at 20°C, H_u = 11,86 kWh/kg)
- **Emission class:** Low NOx class 3 (<120 mg/kWh) according to EN267
- **Protection level:** IP 21

TECHNICAL DATA

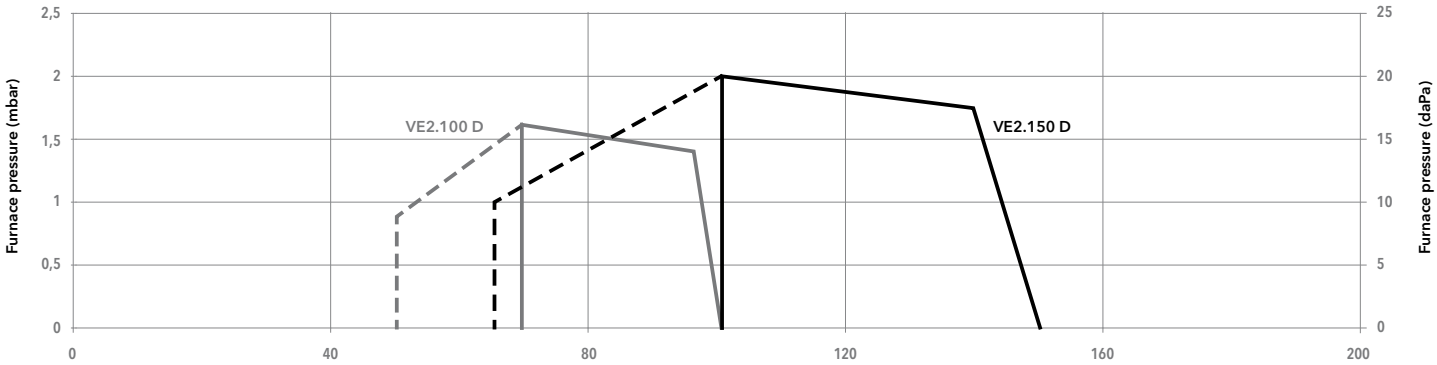

Test conditions conforming to EN267 - Temperature: 20°C - Pressure: 1013,5 mbar - Altitude: 0 m a.s.l.

Power (kW)

Model	VE 2.100 D		VE 2.150 D	
Operation range	(50) 70 - 100 kW		(65) 100 - 150 kW	
Fuel flow	(4,2) 5,9 - 8,4 kg/h		(5,5) 8,4 - 12,6 kg/h	
Nozzle	1,25 US gal/h 45°H		2,00 US gal/h 45°H	
Control box / flame detection	TCH2... / QRB1		TCH2... / QRB1	
Fan motor	230 V - 50 Hz - 130 W		230 V - 50 Hz - 130 W	
Electrical consumption	325 W		325 W	
Flexible hoses	Rp 3/8" / DN6 x 1,5 - 1500 mm		Rp 3/8" / DN6 x 1,5 - 1500 mm	
Acoustic level (LpA)	66,5 dB(A)		66,5 dB(A)	
Head lenght	KN	KL	KN	KL
Complete burner code	-	**3833101**	-	**3833102**

OTHER AVAILABLE VERSIONS

VENT Versions for continuous ventilation and post-ventilation

SCOPE OF SUPPLY

The burner is delivered in its package complete with:
- 1 setting template
- 1 burner flange with insulation
- 1 bag containing installation fittings
- 1 bag containing technical documentation (instruction manual, technical data, electrical diagram, exploded view and spare parts list)

MDE2 RTC LOW NOx CLASS 3

DIMENSIONS (mm)

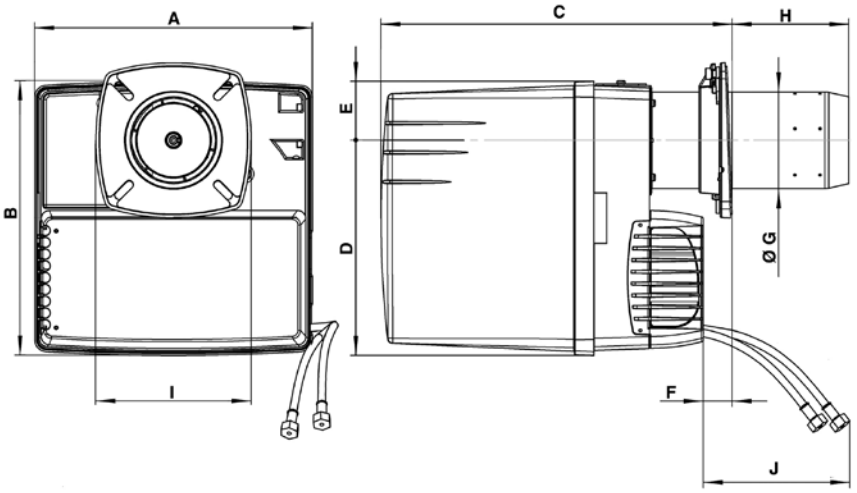

	A	B	C	D	E	F min	ØG	H max	I	J
			KL					KL		
VE2.100	331	326	398…638	256	133	15	115	264	185	700
VE2.150	331	326	398…638	256	133	15	115	264	185	700

Connecting flange

Øa (mm)	b (mm)	c	d
120-135	150-180	M8	45°

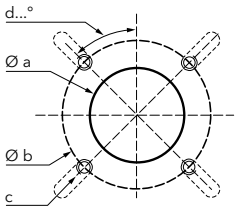

PACKAGING

The burner is delivered in 1 single package containing all components

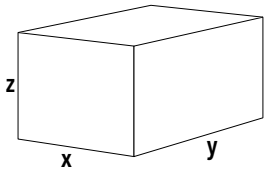

Burner	Dimensions (mm)			Gross weight (kg)
	X	Y	Z	
VE 2.100 D	400	400	760	18
VE 2.150 D	400	400	760	18

VB 2.38 VD, VB 2.45 VD, VB 2.54 VD, VB 2.66 VD

22 ... 66 kW
2 stages (Low NOx class 3, Blue flame)

- **Fuel:** light oil (viscosity 6 mm²/s at 20°C, H_u = 11,86 kWh/kg)
- **Emission class:** Low NOx class 3 (<120 mg/kWh) according to EN267
- **Protection level:** IP 21

TECHNICAL DATA

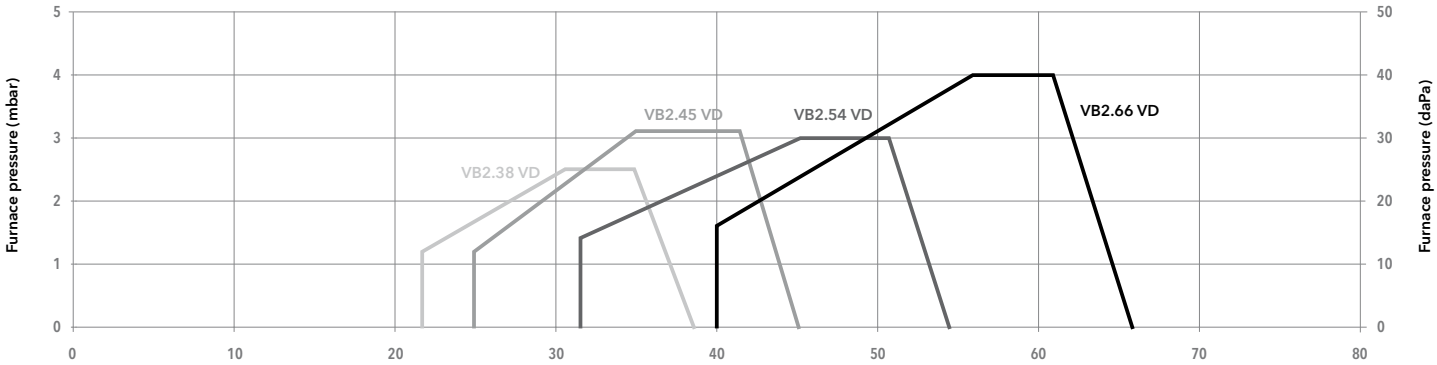

Test conditions conforming to EN267 - Temperature: 20°C - Pressure: 1013,5 mbar - Altitude: 0 m a.s.l.

Power (kW)

Model	VB 2.38 VD		VB 2.45 VD		VB 2.54 VD		VB 2.66 VD	
Operation range	22 - 38 kW		25 - 45 kW		32 - 54 kW		40 - 66 kW	
Fuel flow	1,8 - 3,2 kg/h		2,1 - 3,8 kg/h		2,7 - 4,6 kg/h		3,4 - 5,6 kg/h	
Nozzle	0,55 US gal/h 80°S		0,55 US gal/h 80°S		0,65 US gal/h 80°S		1,00 US gal/h 80°S	
Control box / flame detection	TCH 24x / IRD 1010		TCH 24x / IRD 1010		TCH 24x / IRD 1010		TCH 24x / IRD 1010	
Fan motor	230 V - 50 Hz - 56 W		230 V - 50 Hz - 190 W		230 V - 50 Hz - 190 W		230 V - 50 Hz - 190 W	
Electrical consumption	191 W		287 W		325 W		310 W	
Flexible hoses	Rp 3/8" / M14 x 1,5 - 1000 mm		Rp 3/8" / M14 x 1,5 - 1000 mm		Rp 3/8" / M14 x 1,5 - 1000 mm		Rp 3/8" / M14 x 1,5 - 1000 mm	
Acoustic level (LpA)	59,3 dB(A)		67,2 dB(A)		70,2 dB(A)		68,4 dB(A)	
Head lenght	KN	KL	KN	KL	KN	KL	KN	KL
Complete burner code	**3835349**	-	**3835350**	-	**3835351**	-	**3835352**	-

OTHER AVAILABLE VERSIONS

VENT Versions for continuous ventilation and post-ventilation

SCOPE OF SUPPLY

The burner is delivered in its package complete with:
- 1 setting template
- 1 burner flange with insulation
- 1 bag containing installation fittings
- 1 bag containing technical documentation (instruction manual, technical data, electrical diagram, exploded view and spare parts list)

MDE2 RTC LOW NOx CLASS 3

DIMENSIONS (mm)

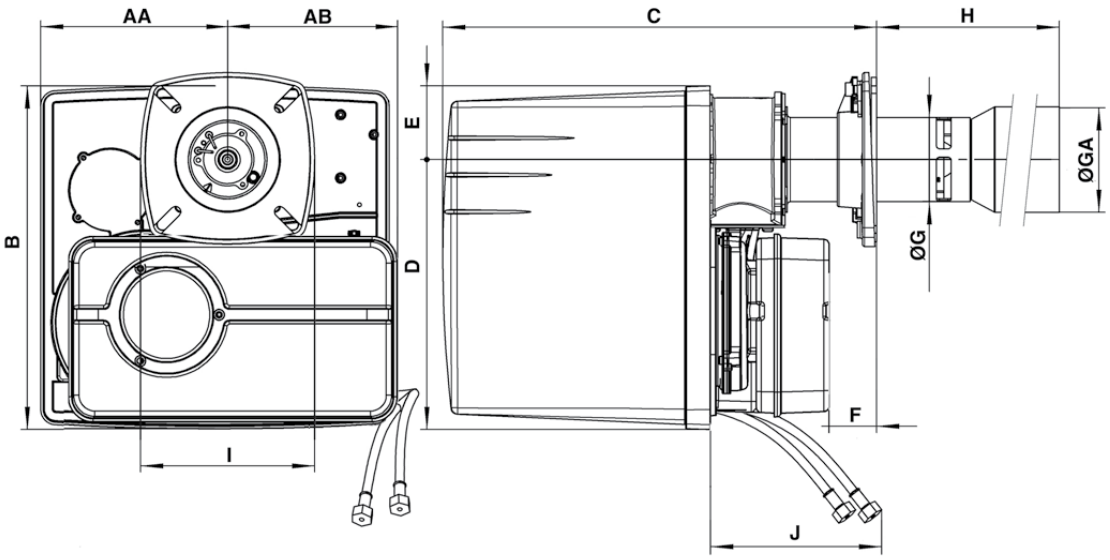

	AA	AB	B	C	D	E	F	ØG	ØGA	H	I	J
				KN						KN		
VB 2.38 VD	178	153	325	390...450	256	69	15...75	80	100	245...185	165	1200
VB 2.45 VD	178	153	325	390...450	256	69	15...75	80	100	245...185	165	1200
VB 2.54 VD	178	153	325	390...450	256	69	15...75	80	100	245...185	165	1200
VB 2.66 VD	178	153	325	390...450	256	69	15...75	100	120	300...240	185	1200

Connecting flange

Model	Øa (mm)	b (mm)	c	d
VB 2.38/45/54 VD	85-104	150-170	M8	45°
VB 2.66 VD	110-135	150-184	M8	45°

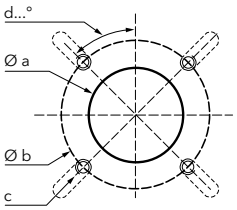

PACKAGING

The burner is delivered in 1 single package containing all components

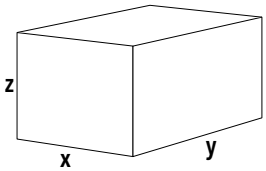

Burner	Dimensions (mm)			Gross weight (kg)
	X	Y	Z	
VB 2.38 VD	400	400	760	17
VB 2.45 VD	400	400	760	17
VB 2.54 VD	400	400	760	17
VB 2.66 VD	400	400	760	17

VB 2.77 VD, VB 2.85 VD, VB 2.95 VD

45 ... 95 kW
2 stages (Low NOx class 3, Blue flame)

- **Fuel:** light oil (viscosity 6 mm²/s at 20°C, H_u = 11,86 kWh/kg)
- **Emission class:** Low NOx class 3 (<120 mg/kWh) according to EN267
- **Protection level:** IP 21

TECHNICAL DATA

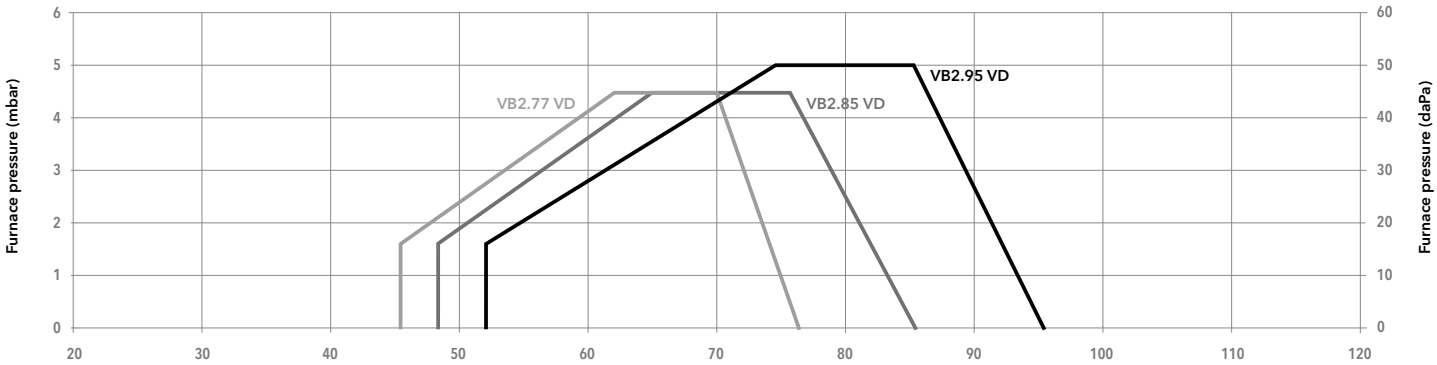

Test conditions conforming to EN267 - Temperature: 20°C - Pressure: 1013,5 mbar - Altitude: 0 m a.s.l.

Model	VB 2.77 VD		VB 2.85 VD		VB 2.95 VD	
Operation range	45 - 77 kW		48 - 85 kW		52 - 95 kW	
Fuel flow	3,8 - 6,5 kg/h		4,0 - 7,2 kg/h		4,4 - 8,0 kg/h	
Nozzle	1,10 US gal/h 80°S		1,25 US gal/h 80°S		1,25 US gal/h 80°S	
Control box / flame detection	TCH 24x / IRD 1010		TCH 24x / IRD 1010		TCH 24x / IRD 1010	
Fan motor	230 V - 50 Hz - 190 W		230 V - 50 Hz - 190 W		230 V - 50 Hz - 190 W	
Electrical consumption	276 W		285 W		262 W	
Flexible hoses	Rp 3/8" / DN6 x 1,5 - 1500 mm		Rp 3/8" / DN6 x 1,5 - 1500 mm		Rp 3/8" / DN6 x 1,5 - 1500 mm	
Acoustic level (LpA)	68,5 dB(A)		66,5 dB(A)		67,6 dB(A)	
Head lenght	KN	KL	KN	KL	KN	KL
Complete burner code	**3835353**	-	**3835354**	-	**3835355**	-

OTHER AVAILABLE VERSIONS

Vent Versions for continuous ventilation and post-ventilation

SCOPE OF SUPPLY

The burner is delivered in its package complete with:
- 1 setting template
- 1 burner flange with insulation
- 1 bag containing installation fittings
- 1 bag containing technical documentation (instruction manual, technical data, electrical diagram, exploded view and spare parts list)

MDE2 RTC LOW NOx CLASS 3

DIMENSIONS (mm)

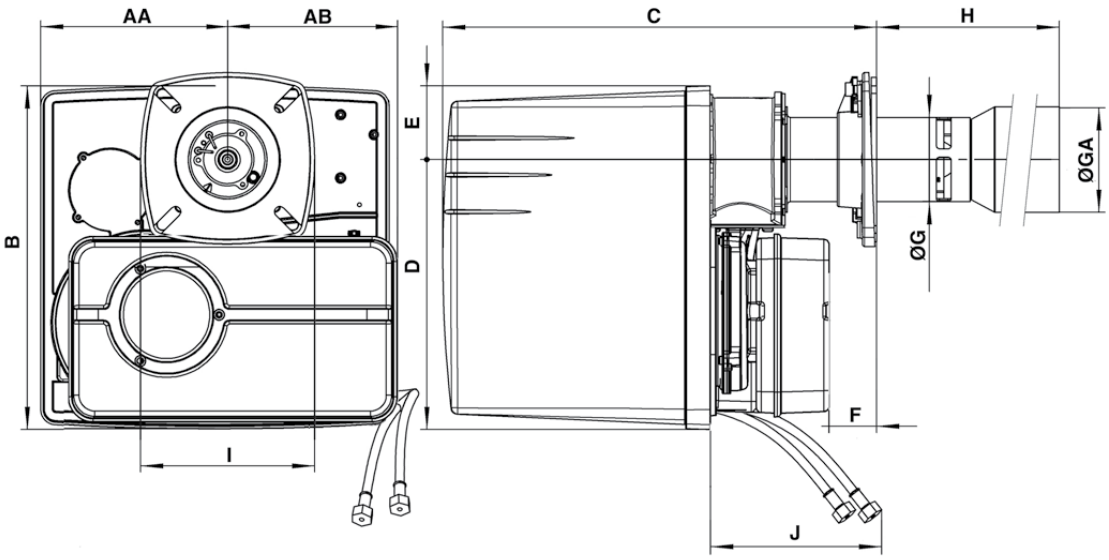

	AA	AB	B	C	D	E	F	ØG	ØGA	H	I	J
				KN						KN		
VB 2.77 VD	178	153	325	390...450	256	69	15...75	100	120	300...240	185	1200
VB 2.85 VD	178	153	325	390...450	256	69	15...75	100	120	300...240	185	1200
VB 2.95 VD	178	153	325	390...450	256	69	15...75	100	120	300...240	185	1200

Connecting flange

Øa (mm)	b (mm)	c	d
110-135	150-184	M8	45°

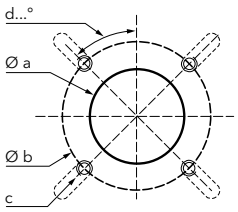

PACKAGING

The burner is delivered in 1 single package containing all components

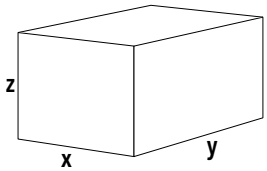

Burner	Dimensions (mm)			Gross weight (kg)
	X	Y	Z	
VB 2.77 VD	400	400	760	17
VB 2.85 VD	400	400	760	17
VB 2.95 VD	400	400	760	17

VL 2.120 D, VL 2.160 D, VL 2.210 D

60 ... 210 kW
2 stages

- **Fuel:** light oil (viscosity 6 mm²/s at 20°C, H_u = 11,86 kWh/kg)
- **Emission class:** Low NOx class 2 (<185 mg/kWh) according to EN267
- **Protection level:** IP 21

TECHNICAL DATA

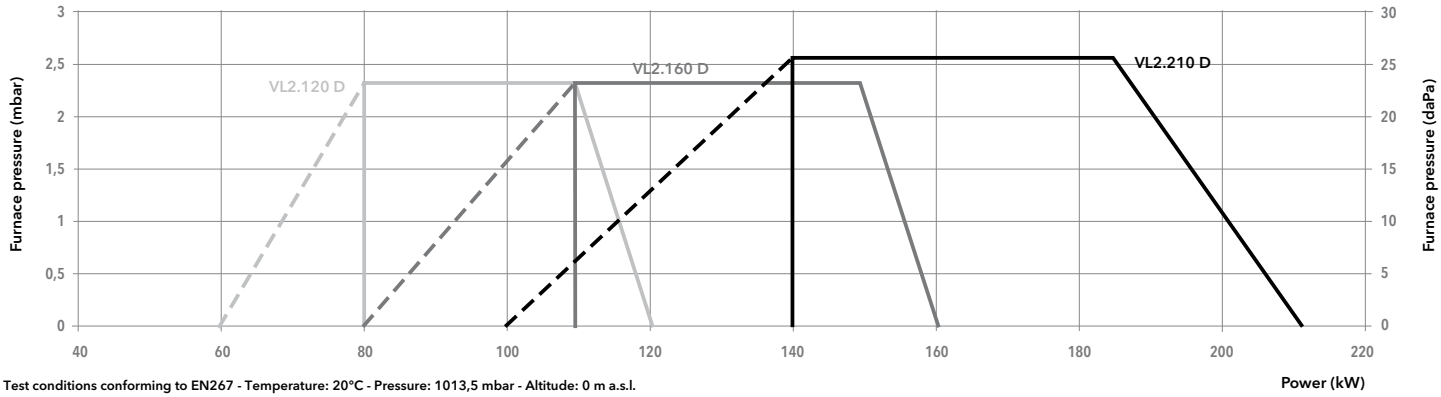

Test conditions conforming to EN267 - Temperature: 20°C - Pressure: 1013,5 mbar - Altitude: 0 m a.s.l.

Model	VL 2.120 D		VL 2.160 D		VL 2.210 D	
Operation range	(60) 80 - 120 kW		(80) 110 - 160 kW		(100) 140 - 210 kW	
Fuel flow	4,6 - 10,0 kg/h		6,1 - 13,5 kg/h		8,4 - 17,7 kg/h	
Nozzles	1,50 US gal/h 45°S		2,25 US gal/h 45°S		2,75 US gal/h 45°S	
Control box / flame detection	TCH 2... / QRB1		TCH 2... / QRB1		TCH 2... / QRB1	
Fan motor	230 V - 50 Hz - 160 W		230 V - 50 Hz - 160 W		230 V - 50 Hz - 130 W	
Electrical consumption	216 W		290 W		345 W	
Flexible hoses	Rp 3/8" / M14 x 1,5 - 1500 mm		Rp 3/8" / M14 x 1,5 - 1500 mm		Rp 3/8" / M14 x 1,5 - 1500 mm	
Acoustic level (LpA)	62 dB(A)		64 dB(A)		65 dB(A)	
Head lenght	KN	KL	KN	KL	KN	KL
Complete burner code	**3833344**	**3833345**	**3833346**	**3833347**	**3833348**	**3833349**

OTHER AVAILABLE VERSIONS

Vent Versions for continuous ventilation and post-ventilation

SCOPE OF SUPPLY

The burner is delivered in its package complete with:
- 1 setting template
- 1 burner flange with insulation
- 1 bag containing installation fittings
- 1 bag containing technical documentation (instruction manual, technical data, electrical diagram, exploded view and spare parts list)

MDE2 RTC

DIMENSIONS (mm)

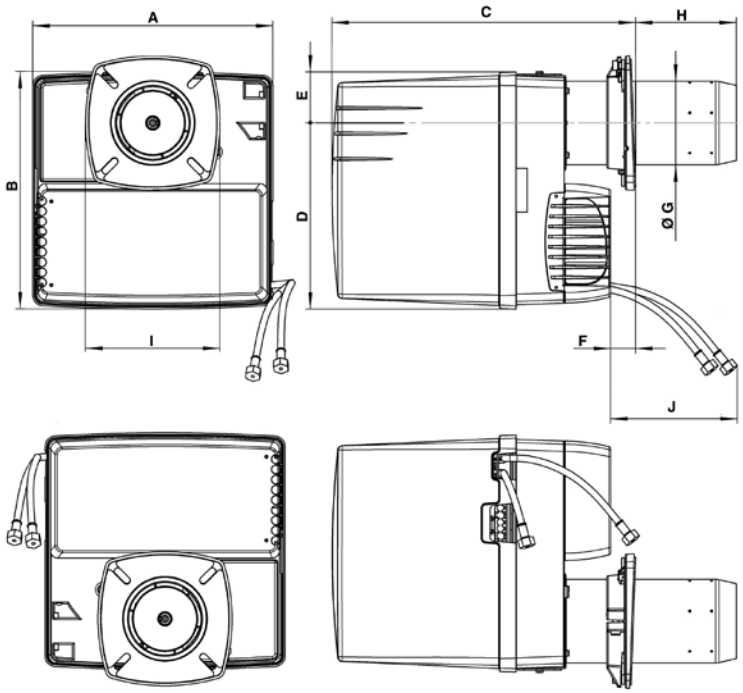

A	B	C		D	E	F min	ØG	H		I	J
		KN	KL					KN	KL		
331	326	398…518	398…638	256	69	15	115	30…150	30…270	185 x 185	1200

Connecting flange

Øa (mm)	b (mm)	c	d
120-135	150-184	M8	45°

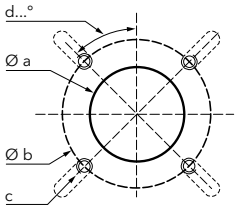

PACKAGING

The burner is delivered in 1 single package containing all components

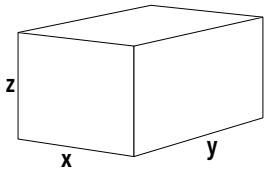

Burner	Dimensions (mm)			Gross weight (kg)
	X	Y	Z	
VL 2.120 D	400	400	770	18
VL 2.160 D	400	400	770	18
VL 2.210 D	400	400	770	19

VL 3.290 D, VL 3.360 D

130 ... 360 kW
2 stages

- **Fuel:** light oil (viscosity 6 mm²/s at 20°C, H_u = 11,86 kWh/kg)
- **Emission class:** Low NOx class 2 (<185 mg/kWh) according to EN267
- **Protection level:** IP 41

TECHNICAL DATA

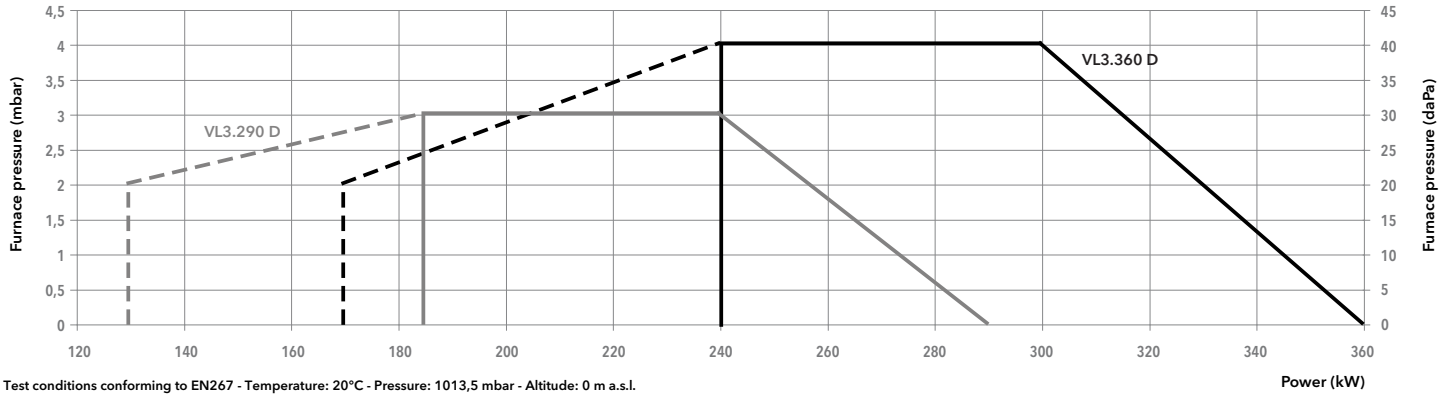

Test conditions conforming to EN267 - Temperature: 20°C - Pressure: 1013,5 mbar - Altitude: 0 m a.s.l.

Model	VL 3.290 D		VL 3.360 D	
Operation range	(130) 185 - 290 kW		(170) 240 - 360 kW	
Fuel flow	15,6 - 24,4 kg/h		20,2 - 30,3 kg/h	
Nozzles	3,75 US gal/h 60°B		4,50 US gal/h 60°B	
Control box / flame detection	TCH2... / QRB1		TCH2... / QRB1	
Fan motor	230 V - 50 Hz - 250 W		230 V - 50 Hz - 300 W	
Electrical consumption	445 W		540 W	
Flexible hoses	Rp 3/8" / DN6 x 1500 mm		Rp 3/8" / DN6 x 1500 mm	
Acoustic level (LpA)	67 dB(A)		69 dB(A)	
Head lenght	KN	KL	KN	KL
Complete burner code	**3833072**	**3833073**	**3833070**	**3833071**

OTHER AVAILABLE VERSIONS

Vent Versions for continuous ventilation and post-ventilation

SCOPE OF SUPPLY

The burner is delivered in its package complete with:
- 1 burner head with flange seal and securing screws
- 1 bag containing installation fittings
- 1 bag containing technical documentation (instruction manual, technical data, electrical diagram, exploded view and spare parts list)

MDE2 RTC

DIMENSIONS (mm)

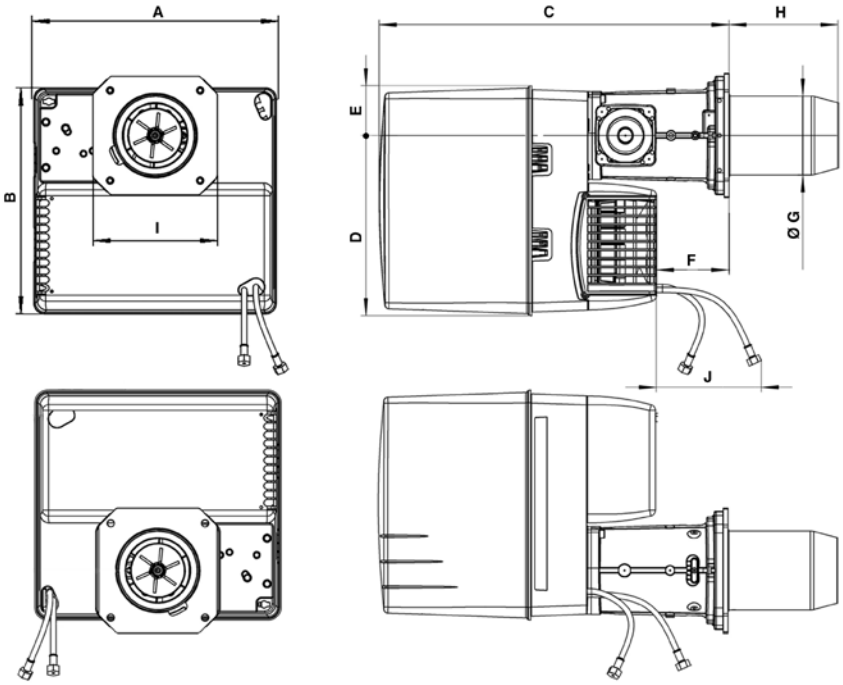

A	B	C	D	E	F	ØG	H		I	J
							KN	KL		
406	379	576	297	82	120	130	180	320	195x205	1000

Connecting flange

Øa (mm)	b (mm)	c	d
155-190	175-220	M10	45°

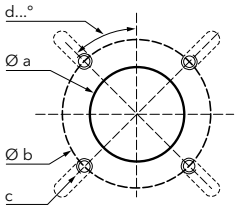

PACKAGING

The burner is delivered on a pallet in 2 packages containing:
- burner housing
- combustion head

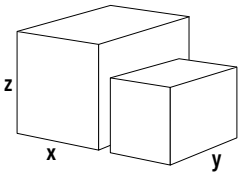

Component		Dimensions (mm)			Gross weight (kg)
		X	Y	Z	
Burner body	VL 3.290 D	440	400	520	22
	VL 3.360 D	440	400	520	23
Combustion head	KN	650	210	260	6
	KL	780	210	260	7

VL 4.460 D, VL 4.610 D

180 ... 610 kW
2 stages

- **Fuel:** light oil (viscosity 6 mm²/s at 20°C, H_u = 11,86 kWh/kg)
- **Emission class:** Low NOx class 2 (<185 mg/kWh) according to EN267
- **Protection level:** IP 41

TECHNICAL DATA

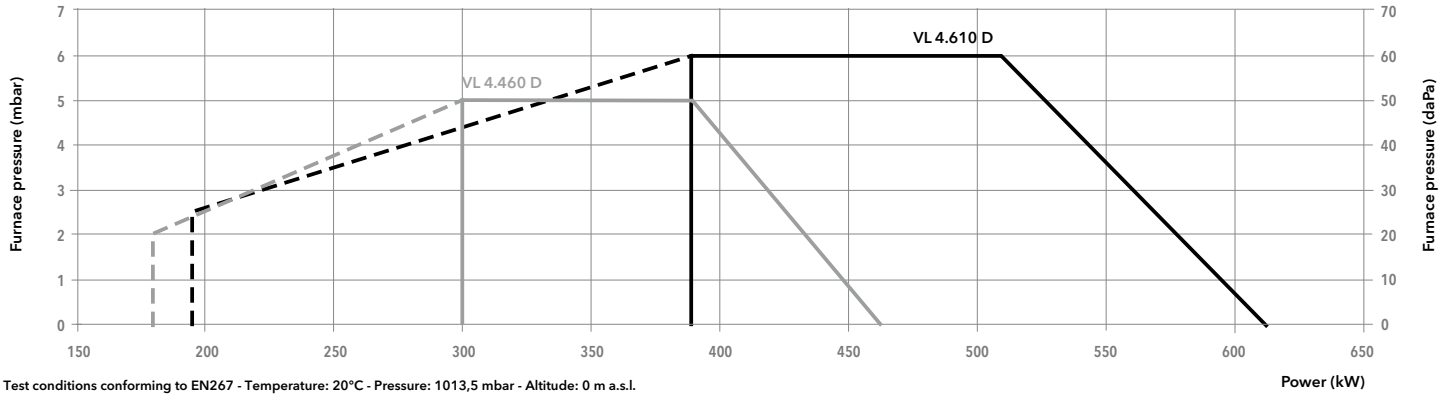

Test conditions conforming to EN267 - Temperature: 20°C - Pressure: 1013,5 mbar - Altitude: 0 m a.s.l.

Model	VL 4.460 D		VL 4.610 D	
Operation range	(180) 300 - 460 kW		(195) 390 - 610 kW	
Fuel flow	(15,2) 25,3 - 38,8 kg/h		(16,4) 32,9 - 51,4 kg/h	
Nozzles	5,00 US gal/h 60°S / 3,5 US gal/h 60°S		6,50 US gal/h 60°S / 3,00 US gal/h 60°S	
Control box / flame detection	TCH2... / QRB1		TCH2... / QRB1	
Fan motor	230 V - 50 Hz - 420 W		230 V - 50 Hz - 750 W	
Electrical consumption	545 W		830 W	
Flexible hoses	Rp 3/8" / DN6 x 1500 mm		Rp 3/8" / DN6 x 1500 mm	
Acoustic level (LpA)	70 dB(A)		71 dB(A)	
Head lenght	KN	KL	KN	KL
Complete burner code	**3833395**	**3833396**	**3833397**	**3833398**

OTHER AVAILABLE VERSIONS

Vent Versions for continuous ventilation and post-ventilation

SCOPE OF SUPPLY

The burner is delivered in its package complete with:
- 1 burner head with flange seal and securing screws
- 1 bag containing installation fittings
- 1 bag containing technical documentation (instruction manual, technical data, electrical diagram, exploded view and spare parts list)

MDE2 RTC

DIMENSIONS (mm)

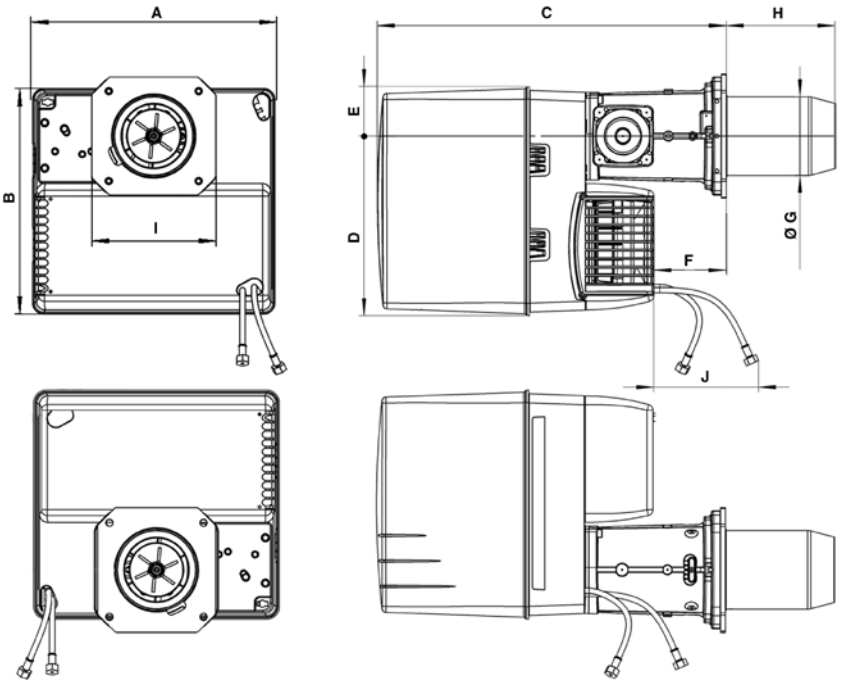

A	B	C	D	E	F	ØG	H		I	J
							KN	KL		
465	475	640	377	97	149	150	220	360	245	1000

Connecting flange

Øa (mm)	b (mm)	c	d
180-240	200-270	M10	45°

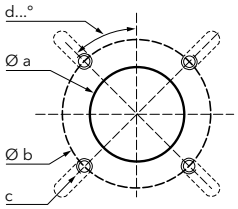

PACKAGING

The burner is delivered on a pallet in 2 packages containing:
- burner housing
- combustion head

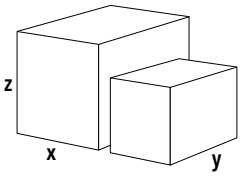

Component		Dimensions (mm)			Gross weight (kg)
		X	Y	Z	
Burner body	VL 4.460 D	490	490	590	30
	VL 4.610 D	490	490	590	34,2
Combustion head	KN	750	260	295	8,5
	KL	895	260	295	9,7

VL 5.950 D, VL 5.1200 D

260 ... 1186 kW
2 stages

- **Fuel:** light oil (viscosity 6 mm²/s at 20°C, H_u = 11,86 kWh/kg)
- **Emission class:** Low NOx class 2 (<185 mg/kWh) according to EN267
- **Protection level:** IP 21

TECHNICAL DATA

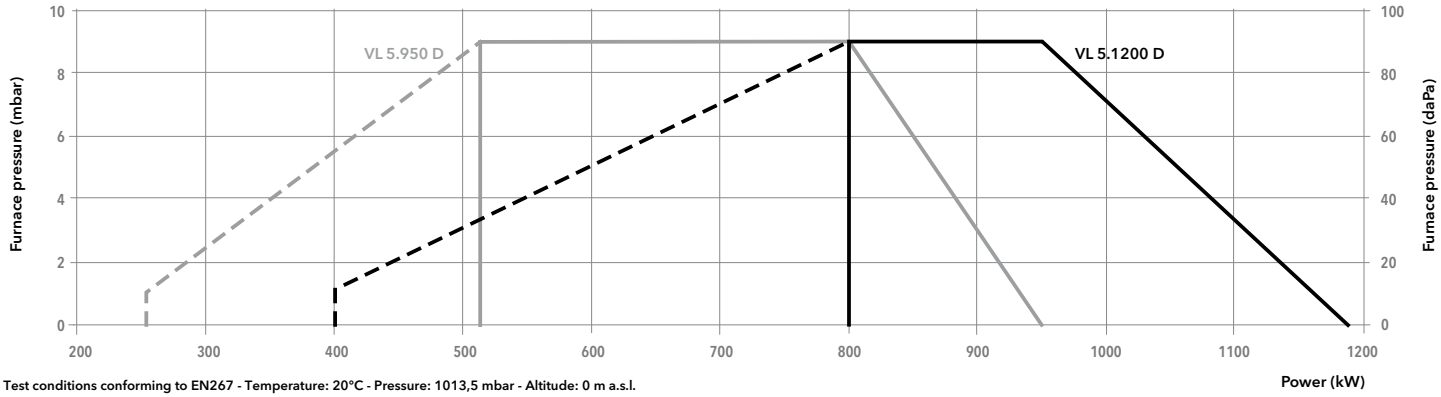

Test conditions conforming to EN267 - Temperature: 20°C - Pressure: 1013,5 mbar - Altitude: 0 m a.s.l.

Model	VL 5.950 D			VL 5.1200 D		
Operation range	(260) 510 - 950 kW			(400) 800 - 1186 kW		
Fuel flow	(21,9) 43 - 80,1 kg/h			(33,7) 67,5 - 100 kg/h		
Nozzles	7,50 + 6,50 US gal/h			8,50 + 7,50 US gal/h		
Control box / flame detection	TCH2... / QRB1			TCH2... / QRB1		
Fan motor	230 V - 50 Hz - 1,5 kW			230 V - 50 Hz - 1,5 kW		
Electrical consumption	160 + 1700 W			155 + 1940 W		
Flexible hoses	Rp 3/8" / M16 x 1,5 - 1500 mm			Rp 3/8" / M16 x 1,5 - 1500 mm		
Acoustic level (LpA)	70 dB(A)			71 dB(A)		
Head lenght	KN	KL	KM	KN	KL	KM
Complete burner code	**3833501**	**3833504**	**3833613**	**3833502**	**3833503**	**3833614**

OTHER AVAILABLE VERSIONS

Vent Versions for continuous ventilation and post-ventilation

SCOPE OF SUPPLY

The burner is delivered in its package complete with:
- 1 burner head with flange seal and securing screws
- 1 bag containing installation fittings
- 1 bag containing technical documentation (instruction manual, technical data, electrical diagram, exploded view and spare parts list)

MDE2 RTC

DIMENSIONS (mm)

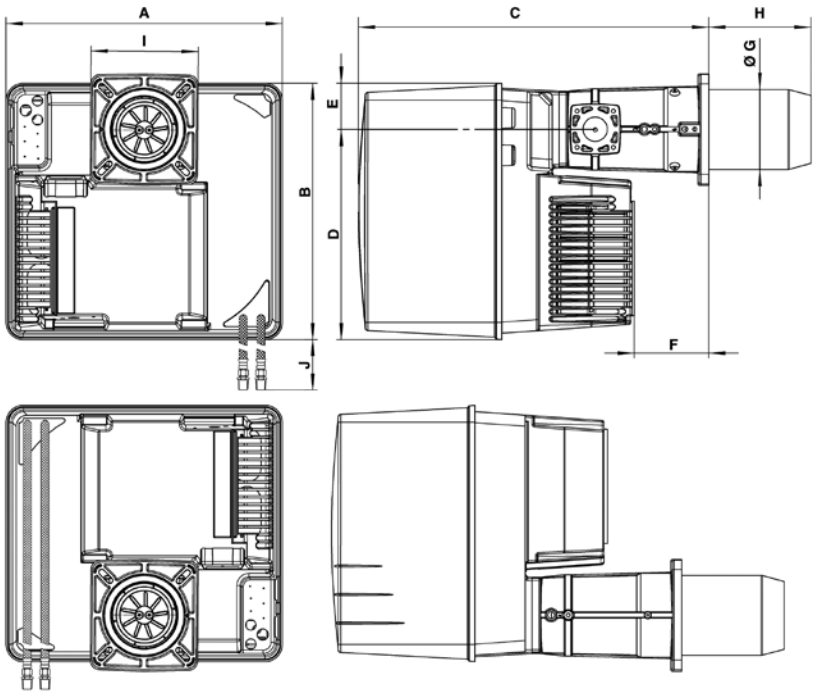

A	B	C	D	E	F	ØG	H			I	J
							KN	KM	KL		
581	549	752	450	99	164	170	215	325	435	230x238	950

Connecting flange

Øa (mm)	b (mm)	c	d
195	220-260	M10	45°

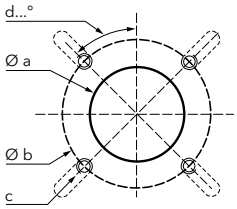

PACKAGING

The burner is delivered on a pallet in 2 packages containing:
- burner housing
- combustion head

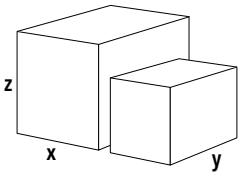

Component		Dimensions (mm)			Gross weight (kg)
		X	Y	Z	
Burner body	VL 5.950 D	800	600	850	58,8
	VL 5.1200 D	800	600	850	58,6
Combustion head	VL 5.950 (KN)	780	265	280	10
	VL5.950 (KL)	1010	265	280	13,5
	VL5.950 (KM)	1010	265	280	12,5
	VL5.1200 (KN)	780	265	280	10,1
	VL5.1200 (KL)	1010	265	280	13,5
	VL5.1200 (KM)	1010	265	280	12

VL 4.460 DP, VL 4.610 DP

180 ... 610 kW
3 stages

- **Fuel:** light oil (viscosity 6 mm²/s at 20°C, H_u = 11,86 kWh/kg)
- **Emission class:** Low NOx class 2 (<185 mg/kWh) according to EN267
- **Protection level:** IP 41

TECHNICAL DATA

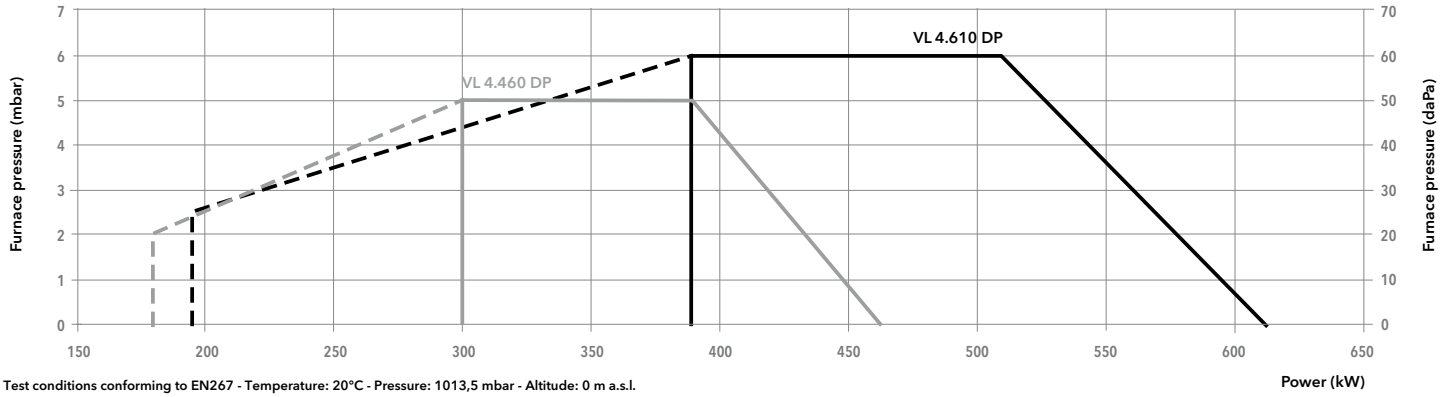

Test conditions conforming to EN267 - Temperature: 20°C - Pressure: 1013,5 mbar - Altitude: 0 m a.s.l.

Model	VL 4.460 DP		VL 4.610 DP	
Operation range	(180) 300 - 460 kW		(195) 390 - 610 kW	
Fuel flow	(15,2) 25,3 - 38,8 kg/h		(16,4) 32,9 - 51,4 kg/h	
Nozzles	4,00 + 2,50 US gal/h		4,50 + 3,00 US gal/h	
Control box / flame detection	TCH2... / QRB1		TCH2... / QRB1	
Fan motor	230 V - 50 Hz - 420 W		230 V - 50 Hz - 750 W	
Electrical consumption	545 W		830 W	
Flexible hoses	Rp 3/8" / DN6 x 1500 mm		Rp 3/8" / DN6 x 1500 mm	
Acoustic level (LpA)	70 dB(A)		71 dB(A)	
Head lenght	KN	KL	KN	KL
Complete burner code	**3833968**	**3833969**	**3833970**	**3833971**

OTHER AVAILABLE VERSIONS

VENT Versions for continuous ventilation and post-ventilation

SCOPE OF SUPPLY

The burner is delivered in its package complete with:
- 1 burner head with flange seal and securing screws
- 1 bag containing installation fittings
- 1 bag containing technical documentation (instruction manual, technical data, electrical diagram, exploded view and spare parts list)

MDE2 RTC

DIMENSIONS (mm)

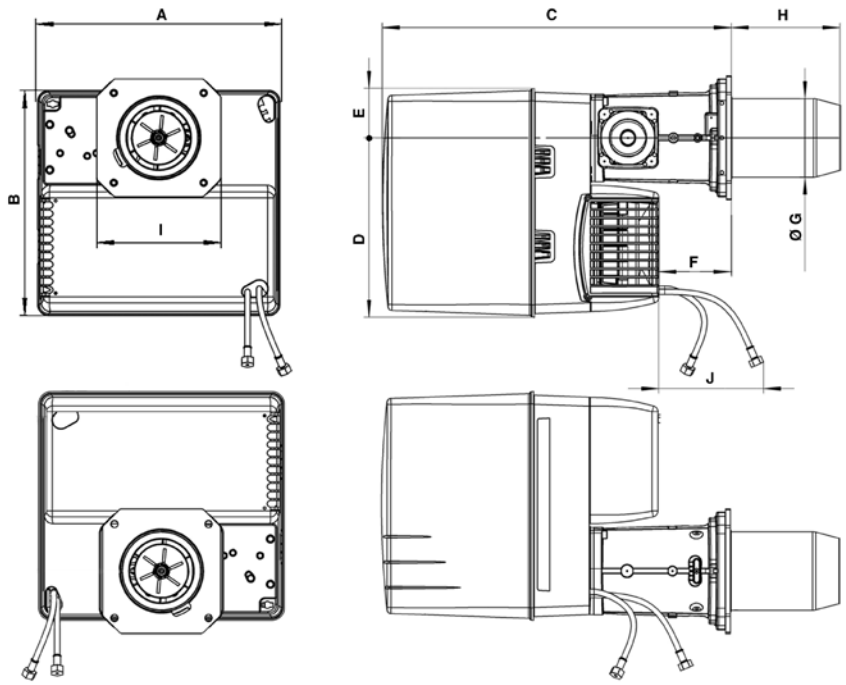

A	B	C	D	E	F	ØG	H		I	J
							KN	KL		
465	475	640	377	97	149	150	220	360	245	1000

Connecting flange

Øa (mm)	b (mm)	c	d
180-240	200-270	M10	45°

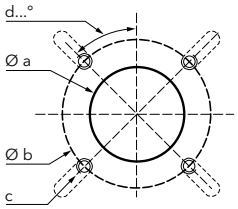

PACKAGING

The burner is delivered on a pallet in 2 packages containing:
- burner housing
- combustion head

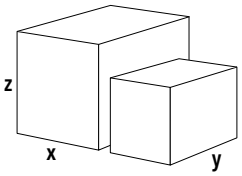

Component		Dimensions (mm)			Gross weight (kg)
		X	Y	Z	
Burner body	VL 4.460 DP	490	490	590	30
	VL 4.610 DP	490	490	590	34,2
Combustion head	KN	750	260	295	8,5
	KL	895	260	295	9,7

VL 5.950 DP, VL 5.1200 DP

260 ... 1186 kW
3 stages

- **Fuel:** light oil (viscosity 6 mm²/s at 20°C, H_u = 11,86 kWh/kg)
- **Emission class:** Low NOx class 2 (<185 mg/kWh) according to EN267
- **Protection level:** IP 21

TECHNICAL DATA

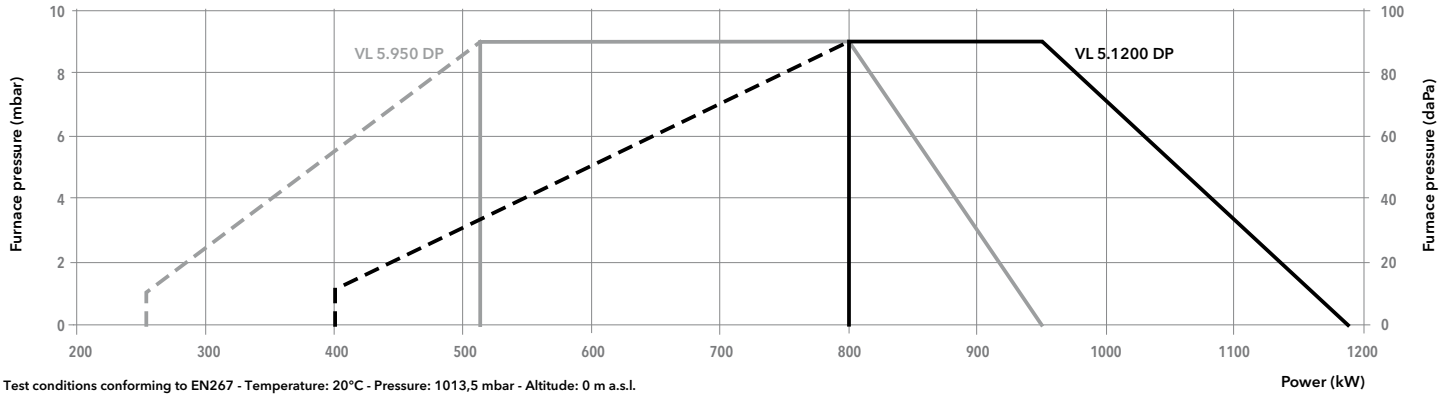

Test conditions conforming to EN267 - Temperature: 20°C - Pressure: 1013,5 mbar - Altitude: 0 m a.s.l.

Model	VL 5.950 DP			VL 5.1200 DP		
Operation range	(260) 510 - 950 kW			(400) 800 - 1186 kW		
Fuel flow	(21,9) 43 - 80,1 kg/h			(33,7) 67,5 - 100 kg/h		
Nozzles	7,50 + 6,50 US gal/h			8,50 + 7,50 US gal/h		
Control box / flame detection	TCH2... / QRB1			TCH2... / QRB1		
Fan motor	230/400 V - 50 Hz - 1,5 kW			230/400 V - 50 Hz - 1,5 kW		
Electrical consumption	160 + 1700 W			155 + 1940 W		
Flexible hoses	Rp 3/8" / M16 x 1,5 - 1500 mm			Rp 3/8" / M16 x 1,5 - 1500 mm		
Acoustic level (LpA)	70 dB(A)			71 dB(A)		
Head lenght	KN	KL	KM	KN	KL	KM
Complete burner code	**3833956**	**3833957**	**3833958**	**3833959**	**3833960**	**3833961**

OTHER AVAILABLE VERSIONS

VENT Versions for continuous ventilation and post-ventilation

SCOPE OF SUPPLY

The burner is delivered in its package complete with:
- 1 burner head with flange seal and securing screws
- 1 bag containing installation fittings
- 1 bag containing technical documentation (instruction manual, technical data, electrical diagram, exploded view and spare parts list)

MDE2 RTC

DIMENSIONS (mm)

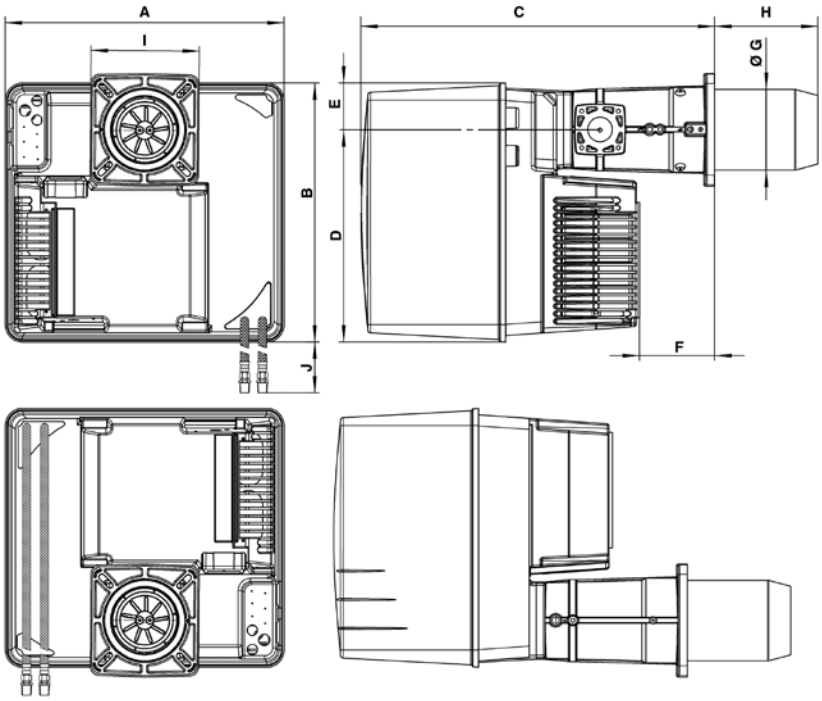

A	B	C	D	E	F	ØG	H			I	J
							KN	KM	KL		
581	549	752	450	99	164	170	215	325	435	230 x 238	950

Connecting flange

Øa (mm)	b (mm)	c	d
195	220-260	M10	45°

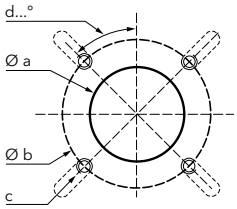

PACKAGING

The burner is delivered on a pallet in 2 packages containing:
- burner housing
- combustion head

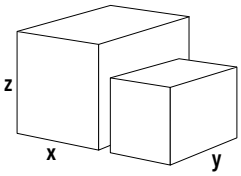

Component		Dimensions (mm)			Gross weight (kg)
		X	Y	Z	
Burner body	VL 5.950 DP	800	600	850	58,8
	VL 5.1200 DP	800	600	850	58,6
Combustion head	VL 5.950 (KN)	780	265	280	10
	VL 5.950 (KL)	1010	265	280	13,5
	VL 5.950 (KM)	1010	265	280	12,5
	VL 5.1200 (KN)	780	265	280	10,1
	VL 5.1200 (KL)	1010	265	280	13,5
	VL 5.1200 (KM)	1010	265	280	12

VL 6.1600 DP, VL 6.2100 DP

320 ... 2080 kW
3 stages

- **Fuel:** light oil (viscosity 6 mm²/s at 20°C, H_u = 11,86 kWh/kg)
- **Emission class:** Low NOx class 2 (<185 mg/kWh) according to EN267
- **Protection level:** IP 21

TECHNICAL DATA

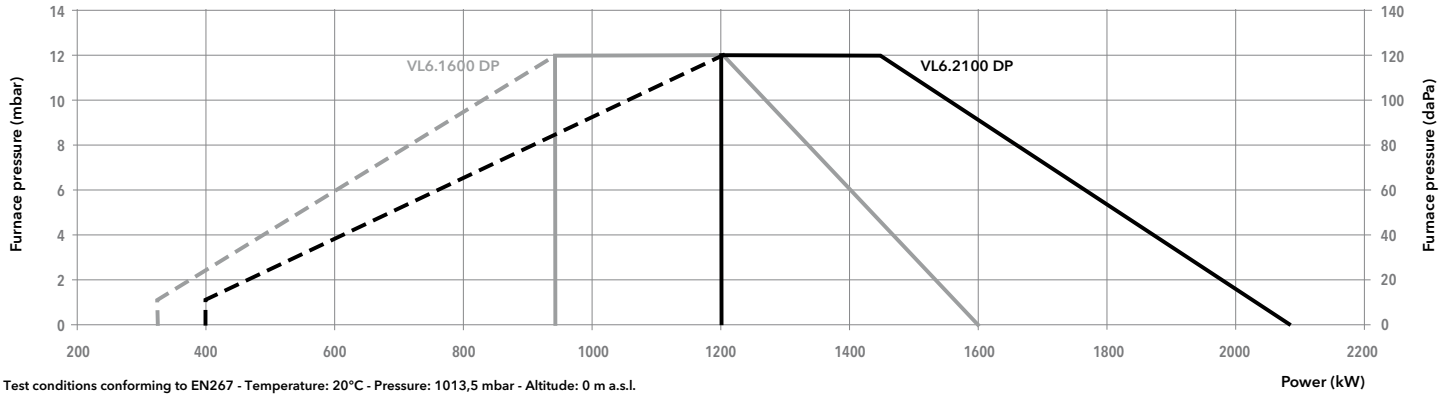

Test conditions conforming to EN267 - Temperature: 20°C - Pressure: 1013,5 mbar - Altitude: 0 m a.s.l.

Model	VL 6.1600 DP			VL 6.2100 DP		
Operation range	(320) 950 - 1600 kW			(400) 1200 - 2080 kW		
Fuel flow	(27) 80,1 - 124,9 kg/h			(33,7) 101,2 - 177 kg/h		
Nozzles	3 x 6,50 US gal/h			3 x 8,50 US gal/h		
Control box / flame detection	TCH3... / QRB1			TCH3... / QRB1		
Fan motor	230/400 V - 50 Hz - 2,2 kW			230/400 V - 50 Hz - 2,7 kW		
Electrical consumption	352 + 2240 W			380 + 2840 W		
Flexible hoses	Rp 1/2" / M16 x 1,5 - 1500 mm			Rp 1/2" / M16 x 1,5 - 1500 mm		
Acoustic level (LpA)	78,1 dB(A)			79,3 dB(A)		
Head lenght	KN	KL	KM	KN	KL	KM
Complete burner code	**3833694**	**3833695**	**3833696**	**3833697**	**3833698**	**3833699**

OTHER AVAILABLE VERSIONS

VENT Versions for continuous ventilation and post-ventilation

SCOPE OF SUPPLY

The burner is delivered in its package complete with:
- 1 burner head with flange seal and securing screws
- 1 bag containing installation fittings
- 1 bag containing technical documentation (instruction manual, technical data, electrical diagram, exploded view and spare parts list)

MDE2 RTC

DIMENSIONS (mm)

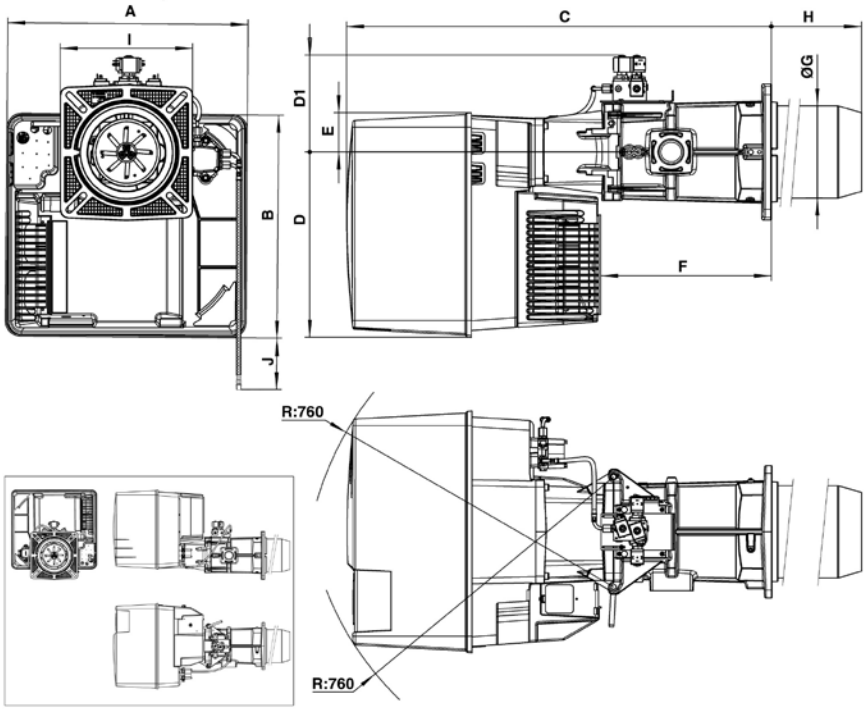

A	B	C	D	D1	E	F	ØG	H			I	J
								KN	KM	KL		
592	553	1050	456	239	97	421	227	270	370	470	326x335	950

Connecting flange

Øa (mm)	b (mm)	c	d
250	300-400	M12	45°

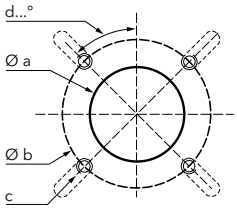

PACKAGING

The burner is delivered on a pallet in 2 packages containing:
- burner housing
- combustion head

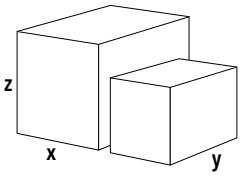

Component		Dimensions (mm)			Gross weight (kg)
		X	Y	Z	
Burner body	VL 6.1600 DP	800	600	850	79,4
	VL 6.2100 DP	800	600	850	79,6
Combustion head	VL 6.1600 (KN)	800	380	420	42
	VL 6.1600 (KL)	1000	420	380	29,8
	VL 6.1600 (KM)	1000	420	380	28,3
	VL 6.2100 (KN)	800	380	420	24
	VL 6.2100 (KL)	1000	380	420	42
	VL 6.2100 (KM)	1000	380	420	42

A modulating burner allows to adapt the power delivered acccording to the boiler/system requirements.
To obtain the modulating operation the installation of a power regulator and the relative temperature or pressure probes, chosen in accordance with the specific requirements of the installation.

To simplify the selection of regulator and probes ELCO offers specific kits. Alternatively, the customer can request the individual components.

Kit RWF50 with sensor

Description	Burners	Code
Kit GEP130 (water - immersion probe)	V2	3834039
Kit GEA130 (water - strap-on probe)	V2	3834040
Kit IEP130 (water - immersion probe)	V3	3834043
Kit IEA130 (water - strap-on probe)	V3	3834044
Kit LEP130 (water - immersion probe)	V4	3834047
Kit LEA130 (water - strap-on probe)	V4	3834048
Kit MEP130 (water - immersion probe)	V5 and V6	3834049
Kit MEA130 (water - strap-on probe)	V5 and V6	3834050
MIF001R (kit mounted in factory)	V2 to V6	3834251

Example: Kit with immersion probe with working field limitation up to 130°C for water tube boiler, mounted in factory on a VG2.210 D	**Kit GEP130** **(water - immersion probe)** **3834039**	+	**MIF001R** **(kit mounted in factory)** **3834251**

Kit RWF55 with sensor

Description	Burners	Code
Kit LEP 130 (water - immersion sensor)	V5 and V6	3834602
Kit LEA 130 (water - strap-on probe)	V5 and V6	3834603
Kit LVA 16 (steam - pressure probe)	V5 and V6	3834604
Acc AQE21.02 (kit for using Kit LEP 130 on hot air generator)	V5 and V6	3834307
MIF001R (kit mounted in factory)	V5 and V6	3834251

Example: Kit with pressure probe for steam boiler, mounted in factory on a VG5.950 DP	**Kit LVA 16** **(steam - pressure probe)** **3834604**	+	**MIF001R** **(kit mounted in factory)** **3834251**

RWF50 stand-alone and wiring kit

Description	Burners	Code
Load controller RWF50 SA	V2 to V6	3833498
Wiring kit RWF50 EW03	V2	3834056
Wiring kit RWF50 EW04	V3	3834057
Wiring kit RWF50 EW05	V4	3834058
Wiring kit RWF50 W06-07	V5 and V6	3834032

Example:
Power regulator RWF50 for VG3.360 DP and wiring kit

Load controller RWF50 SA 3833498 + Wiring kit RWF50 EW04 3834057

RWF55 stand-alone and wiring kit

Description	Burners	Code
Load controller RWF55 SA	V5 and V6*	3834298
Wiring kit RWF55 W06-07	V5 and V6*	3834299

*: not suitable for VGL05 and VGL06

Example:
Power regulator RWF55 for VG5.1200 DP and wiring kit

Load controller RWF55 SA 3834298 + Wiring kit RWF55 W06-07 3834299

Separated sensors

Description	Burners	Code
Acc TIP 130 (Immersion probe, water 130°C)	V2 to V6	3833163
Acc TSP 130 (Strap-on probe, water 130°C)	V2 to V6	3833165
Acc TIP 400 (Hot water/air probe Pt100 / 400°C - L = 160 mm)	V2 to V6	65300274
Acc QBE2002-P1 (0 … 1 bar)	V2 to V6	3834310
Acc QBE2002-P2 (0 … 2 bar)	V2 to V6	3834311
Acc QBE2002-P4 (0 … 4 bar)	V2 to V6	3834312
Acc QBE2002-P10 (0 … 10 bar)	V2 to V6	3834313
Acc QBE2002-P16 (0 … 16 bar)	V2 to V6	3834305
Acc QBE2002-P25 (0 … 25 bar)	V2 to V6	3834314
Acc AQB22.1 (QBE sensor support)	V2 to V6	3834309
Acc AQB2001 (1 meter connection pipe)	V2 to V6	3834308
Acc QAC22 (external probe)	V2 to V6	13018513

External air intake connection kit

Description	Burners	Code
Kit RG4 (Ø 50mm, directable)	VB1.20 to V1.55	13004320
Kit RG9 (Ø 50)	VB1.20 to VB1.95	13011996
Kit RG10 (Ø 100)	V2	13018822
Kit RG11 (Ø 160)	V3	3833152
Kit RG12 (Ø 200)	V4	3833429
Kit RG3 (Ø 250)	V05, V06, V5, V6	13014375

Cable for 0…10V load input[1] (applicable to Ariston TCG2/TCH2 or higher)

Description	Burners	Code
Kit 0-10V BCU/0	V2 to V6	3834253

[1]: galvanic isolation

Cable for 0…10V load input[1] + potentiometer for actuator position feedback

Description	Burners	Code
Kit 0-10V BCU/1	V2, V3, V4	3834170
Kit 0-10V BCU/2	V5, V6	3834171

[1]: galvanic isolation

Valve tightness control

Description	Burners	Code
VPS 504[2]	VGL2 to VGL06	13001795
Connection pipe for VPS installation on gas train 13020944	VGL06	13015138

[2]: for VGL06, VPS is included in the complete burner

External valve connection kit

Description	Burners	Code
Connector for safety solenoide valve	V1 to V4	13010959

MDE2 System

Description	Burners	Code
PC interface tool to connect the control box to a personal computer allowing transmission of burner operation data, fault signals and service information	V1 and V2	3833018

Sound proofing box - noise reduction 15 … 20 dB(A)

Description	Burners	Code
CI20	V2 gas and light oil	13021659
CI21	V3 gas and light oil	14000401
CI22	V4 gas and light oil	13019309
CI23	V05, V5	13019310
CI24	V06, V6	13019311

Sound proofing box - noise reduction 20 … 30 dB(A)

Description	Burners	Code
CI31	V3 gas and light oil	65300729
CI32	V4 gas and light oil	13019313
CI33	V05, V5	13019314
CI34	V06, V6	13019315

Potentiometer for actuator position feedback - wound, 50 mA maximum

Description	Burners	Code
Single ASZ12.703	VGL05 and VGL06	13018502
Single ASZ12.703 + cover	VGL05 and VGL06	13002293
Double ASZ22.703	VGL05 and VGL06	13018503
Double ASZ22.703 + cover	VGL05 and VGL06	13002294

Potentiometer for actuator position feedback - conductive plastic, 0,1 mA maximum

Description	Burners	Code
Single ASZ12.803	VGL05 and VGL06	13018504
Single ASZ12.803 + cover	VGL05 and VGL06	13002295
Double ASZ22.803	VGL05 and VGL06	13018505
Double ASZ22.803 + cover	VGL05 and VGL06	13002296

Maximum gas pressure switch

Description	Burners	Code
Max GPS 1	V02 to V06, V2 to V6	3833903

Gas and air manometer with push button

Description	Burners	Code
AGM 0-60mbar	V1 to V06, V6	13002181
AGM 0-100mbar	V1 to V06, V6	13018509
AGM 0-400mbar	V1 to V06, V6	13018510

Front boiler flange

Description	Burners	Code
CP1	V1	13018495
CP2	V2	13018496
CP3.1	V3	3833151
CP4	V4, V5 and VGL05	13018499
CP5.1	V6 and VGL06	13008019

Gas filter

Description	Burners	Code
RP 15 - 1/2"		3141957
RP 20 - 3/4"	V1 to V05, V5	3142045
RP 25 - 1"	V2 to V06, V6	3142046
RP 40 - 1"1/2	V2 to V06, V6	3141954
RP 50 - 2"	V3 to V06, V6	3121384
DN 65 - 2"1/2	V05 and V06, V5 and V6	3124111
DN 80 - 3"	V06, V6	3142088
DN 100 - 4"		3142205
DN 125 - 5"		3142206

Antivibration coupling - Compensator

Description	Burners	Code
RP 1/2" threaded connection		3122321
RP 3/4" threaded connection		3122322
Rp 1" threaded connection	V1 to V06, V6	3122323
RP 1"1/4 threaded connection		3122324
Rp 1"1/2 threaded connection	V2 to V06, V6	3122325
Rp 2" threaded connection	V3 to V06, V6	3122326
DN 50 flanged connection	V3 to V06, V6	12001014
DN 65 flanged connection	V05 and V06, V6	3142060
DN 80 flanged connection	V06, V6	3122328
DN 100 flanged connection		3122329
DN 125 flanged connection		3142061

Ball valve

Description	Burners	Code
Rp 1/2" threaded connection	V1	3142000
Rp 3/4" threaded connection	V1 to V05, V5	3142254
Rp 1" threaded connection	V1 to V06, V6	3121430
Rp 1"1/4 threaded connection		3142253
Rp 1"1/2 threaded connection	V2 to V06, V6	3142101
Rp 2" threaded connection	V3 to V06, V6	3142102
DN 65 flanged connection	V05 and V06, V6	3142062
DN 80 flanged connection	V06, V6	3143730
DN 100 flanged connection		3141997
DN125 flanged connection		3141998

Kit Variatron

Description	Burners	Code
Kit 1,5TT	VG5 DP	3833859
Kit 3,0TT	VG6 DP	3833860

Kit remote reset

Description	Burners	Code
Kit remote reset for Artison TC...	V1 to V6	13011486
Kit remote reset for BT3...	V1 M to V6 M	3144622

Kit remote reset (BT300)

Description	Burners	Code
Kit remote reset BT3	V1 M to V6 M	3144622

Kit additional oil safety valve

Description	Burners	Code
Kit OSV 01/02/03	V1 and V2	**3832706**
Kit OSV 06	V5	**3834195**

"Flame on" digital output (BT300)

Description	Burners	Code
Kit ROS BT3	V2 M to V6 M	**on request**

Kit LCM (BT300)

Description	Burners	Code
Analog input and output (chosen among 0-10 V and 4-20 mA) (Module to be fitted by the customer)	V2 M to V6 M	**3836239**

Subsidiaries ELCO

GERMANY
ELCO GmbH
Dreieichstraße 10
Mörfelden-Walldorf
Tel.: +49 (0) 6105 287-287
Fax: +49 (0) 6105 287-199

NETHERLANDS
Elco Burners B.V.
Meerpaalweg, 1
1332 BB Almere
P.O. box 30048
1303 AA Almere
Tel. +31 088 69 573 11
Fax +31 088 69 573 90

SWITZERLAND
Elcotherm AG
Sarganserstrasse 100
7324 Vilters
Tel. +41 (0)81 725 25 25
Fax +41 (0)81 723 13 59

AUSTRIA
ELCO Austria GmbH
Aredstraße 16 - 18
2544 Leobersdorf
Tel. +43 (0)2256 639 99 32
Fax +43 (0)2256 644 11

ENGLAND
Ariston Thermo UK Ltd
Suite 3, The Crown House
Blackpole East, Blackpole Road,
Worcester WR3 8SG
Tel. +44 01905 788010
Fax +44 01905 788011

FRANCE
14, rue du Saule Trapu
Parc d'activité du Moulin
91882 Massy
Tel. +33 01 60 13 64 64
Fax +33 01 60 13 64 65

ITALY
Viale Roma, 41
28100 Novara
Tel. +39 0732 633 590
Fax +39 0732 633 599

RUSSIA
Ariston Thermo RUS
Eniseyskaya str. 1, bld 1,
Office Center "LIRA" #415
129344 Moscow
Tel. +7 495 213 0300 #5700
Fax +7 495 213 0302

CHINA
Ariston Thermo (China) Co., Ltd.
17A2, V-Capital Bldg
No. 333 Xian Xia Road
200336 Shanghai
Tel. +86 21 6039 8691
Fax +86 21 6039 8620

Version 1.4 | 07/03/2018
All rights reserved | ELCO declines all responsibility for any printing mistakes or any content transcription in the present document and reserves the right to modify, without prior notice, any product datas or characteristics

Contact us to know more about our products and solutions

www.elco-burners.com
contact@elco-burners.com